ATP

ADVANCED TECHNOLOGY PRODUCTS

Product Catalog

Quality Focused, Customer Driven

Rev 2/18

Additions to this Version (rev 02/18)

NEW SURETHANE 85™ ULTRA-FLEXIBLE POLYURETHANE

Surethane 85™

Surethane 85™ is a softer version of 98A Surethane® Tubing. The softer durometer of Surethane 85™ increases flexibility and provides easier installation inside of equipment enclosures.

Page 9

VALUE-TUBE™ NSF61® POLYETHYLENE LLDPE

IMBIBE™ NSF61® POLYETHYLENE LLDPE

Value-Tube™ and Imbibe™ Polyethylene lines have Merged

Value-Tube™ and Imbibe™ Polyethylene lines have Merged to simplify stocking and ordering. Value-Tube™ will now carry an NSF 61® certification. Please be sure to view the notes on the slight nuances of the merger.

Page 14-16

NEW TechniSpiral™

TechniSpiral™

Single Tube Spirals are available in both 98A Polyurethane and Nylon 12. These spirals are compact and intended for assembly and OEM applications.

Page 211-216

NEW

Pneumatic Quick Disconnects are Available on Hose and Spiral Assemblies

Select Spirals and Hose Assemblies can now be equipped with pneumatic quick disconnect fittings. This is a value-added service from ATP that provides high quality couplings and plugs on its premium lines of spiral and hose.

TECHNITHANE™

Page 199-202

ARMOR-AIR

Page 28-29

ARMORTHANE™

Page 208-209

STRIPER™ REINFORCED PVC

Page 31-32

The following coupling and plugs are available for installation:

Safety-Touch™

Page 241

Premium Series (Auto)

Page 224-231

Safety Slide™

Page 240

Economy Series (Manual)

Page 235-236

Additions to this Version (rev 02/18)

NEW Fluidfit

Additional Fittings added to Fluidfit

ATP has added several new Fluidfit NSF 61® certified configurations to the catalog. These include:

HRST
Male Swivel
Run Tee Fittings
Page 182

HRPT
Male Swivel
Branch Tee Fittings
Page 181

HRPL
Male Swivel
Elbow Fittings
Page 180

HRWT
Male Swivel
Y Fittings
Page 183

HUFF
BSPP Reducers
Page 196

HCAS-F
Press-Fit
Cartridge Fittings
Page 196

HCAS-H
Press-Fit
Cartridge Fittings
With O-Ring
Page 196

NEW Safety-Twist™

Safety-Twist™ Locking Safety Couplings

Safety-Twist™ Locking Safety Couplings feature a unique operation. After the coupling is connected to the plug, the sleeve rotates. This action locks the coupler from unintended disconnection. When the user disconnects the coupling, they must twist the sleeve which vents all downstream pressure before removing the plug.

Page 242

Stocking Charts are Now Included on Tubing and Hose Configurations

Stocking charts have been included on tubing, hose, and spiral product pages. These charts inform a user of the stocking status of each diameter offered by ATP.

Material Availability by Color Code												
Model	BK	C	CB	G	GY	LB	LG	NB	OR	R	W	Y
TT-316	•	•	X	•	X	•	X	•	X	•	•	•
TT-14	•	•	✓	•	LQ	•	X	•	X	•	•	•
TT-2164	•	•	✓	•	LQ	LQ	LQ	•	X	•	•	LQ
TT-38	X	•	✓	X	X	X	X	•	X	•	X	•
TT-1332	X	X	X	X	X	X	X	X	X	X	X	X
TT-12	X	X	✓	X	X	X	X	X	X	X	X	X
TT-8	•	•	X	•	X	•	X	•	X	•	•	•
TT-10	•	•	X	•	X	•	X	•	X	•	X	•
TT-12	•	•	X	•	X	•	LQ	•	X	•	X	•
TT-16	•	•	X	X	X	•	X	X	X	X	X	X

✓: Spirals are Available •: Available Material – Some Lead-Time for Spiraling
LQ: Limited Quantities of Material - Contact ATP X: Not-Stocked (Minimum Runs Apply) - Contact ATP
Availability is Subject to Change, Contact ATP

✓ Indicates that the Material is Available
• Used with Spirals, Indicates that Tubing is Available for Spiraling
LQ Indicates that Stock is Available, but in Limited Quantities, Contact ATP Before Ordering
X Indicates that This Material is Not Normally Stocked, Minimum Extrusion Runs will Apply

Limited Warranty

Advanced Technology Products expressly excludes all warranties, guarantees and representations; express or implied, including but not limited to warranties of merchantability, material, workmanship, design and suitability for a specified or intended purpose.

Products shall be free of defects in material and workmanship for a period of one (1) year after shipment.

If the product purchased is defective in any way during the one (1) year period, please contact ATP for an RGA number to return the product. No unauthorized returns will be accepted. Ship product prepaid to ATP for a full evaluation. If the product is found to be defective, ATP will repair or replace the product at no charge to the customer at ATP's sold discretion.

Pricing and Other Details

Advanced Technology Products maintains and continually updates both pricing and technical details through various publications. In some instances, there may be information that does not match. When this situation occurs, the ATP website will take precedence over all other published material or discretion will be left to ATP.

Technical Drawings and Supporting Documentation

Advanced Technology Products maintains a collection of drawings, MSDS sheets, and other documentation that is available for use by customers. This information may not be available on the ATP website. A reasonable attempt will be made to furnish supporting documentation.

Contact Information

Ohio (Headquarters, Distribution, Manufacturing):

Physical Address: 12740 State Route 4 Milford Center, OH 43045
Mailing Address: Po Box 335 Milford Center, OH 43045
Phone: (937) 349-4055 Fax: (937) 49-4155
Website: www.atp4pneumatics.com Email: info@atp4pneumatics.com

Tennessee (Distribution Center):

2334 Southpark Dr Unit # 200 Murfreesboro, TN 37128
Phone: (615) 898-1966 Fax: (615) 898-1967

Table of Contents

Tubing & Hose	3 - 32
Technibond® Bonded Tubing & Spirals	33 - 51
Technifit™ Push-to-Connect Fittings	52 - 173
Fluidfit™ Push-to-Connect Fittings	174 - 196
Spiral Recoil Hose	197 - 217
Replacement Hose Fittings	218 - 221
Pneumatic Quick Disconnect Couplings	222- 244
Brass Fittings & Mufflers	245- 252
Aluminum Manifolds & Free Fittings	253- 255
Tubing & Hose Clamps	256 - 271
Tubing & Hose Cutters	272 - 274
Hose Reels & Balancers	275 - 278
Compressed Air Blowguns	279 - 281

Tubing & Hose

General Tubing Information

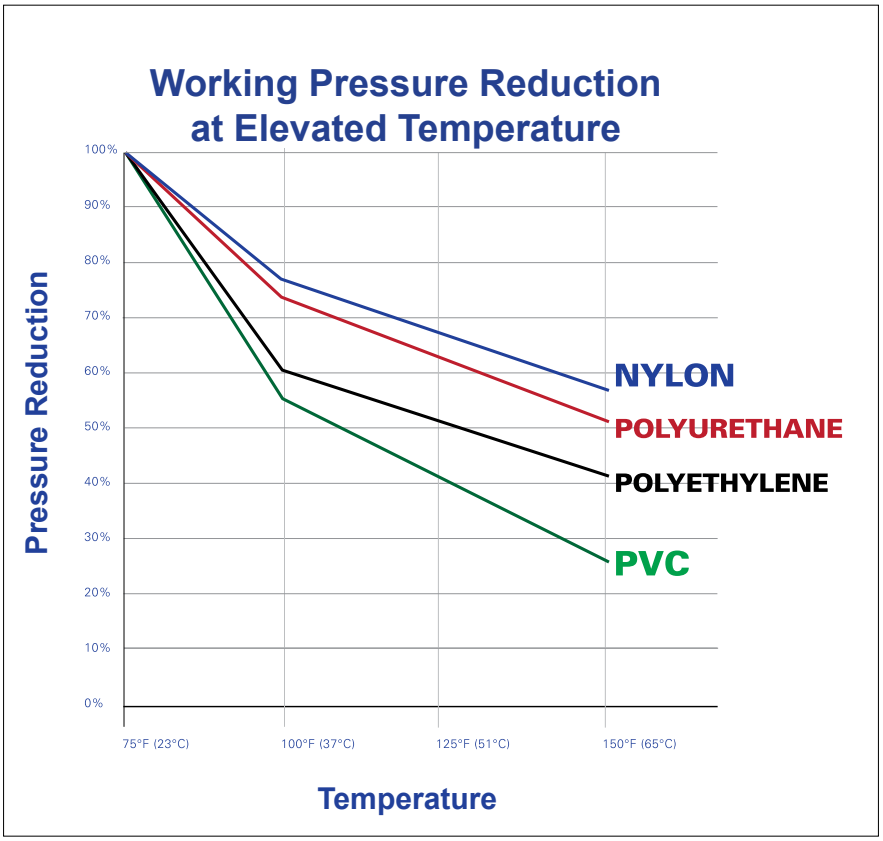

Fittings Use by Tubing Style

To ensure a long lasting and leak free connection, the proper fitting selection is imperative.

Tubing Style	TechniFit™/Fluidfit (Push-To-Connect)	Barb-Type	Compression	PTF (Ferruless Polytube Fitting)
Surethane®	✓	✓	✓	✓
Surethane 85™	x	✓	x	x
Surethane UV™	✓	✓	✓	✓
Nylochem®	✓	x	✓	✓
Value-Tube™	✓	✓	✓	✓
Vinyl-Flex™	x	✓	x	x
Mercury™	✓	✓	✓	✓
Venus™	✓	✓	✓	✓
Armor-Weld™	✓	✓	✓	✓
MonoShield®	✓	✓	✓	✓
Technibond®	✓	✓	✓	✓
Dura-Pure®	x	✓	x	✓

General Tubing Information

Non-Stock & Private Label Minimum Runs

Polyurethane (Surethane® & Monoshield™)		
Tubing O.D.	**Same Net Pricing**	**+ 15% Adder**
1/8”	30,000’	15,000’
5/32” , 4mm	15,000’	7,500’
3/16”	30,000’	15,000’
1/4”, 6mm	15,000’	7,500’
5/16”, 8mm	10,000’	5,000’
3/8”, 10mm	10,000’	5,000’
1/2”, 12mm	5,000’	2,500’
9/16”	2,500’	
5/8”, 16mm	2,500’	
3/4”	2,500’	

Nylon (Nylochem®) & PE (Value-Tube™ NSF 61®)	
Tubing O.D.	**Same Net Pricing**
1/8”	50,000’
5/32” , 4mm	50,000’
3/16”	50,000’
1/4”, 6mm	50,000’
5/16”, 8mm	40,000’
3/8”, 10mm	25,000’
1/2”, 12mm	14,000’
9/16”	2,500’
5/8”, 16mm	2,500’
3/4”	2,500’

Tubing Certifications

Certifications and compliance are important in many markets to ensure that products are safe for use in critical applications such as food and beverage.

Tubing Style	Material	NSF 51®	NSF 61®	ASTM – D3295	ASTMF 930-03	EN-71	FDA Compliant	PAHS	REACH Prop 65	ROHS	UL 94 VO	USP Class VI
Surethane®	(PU) Polyurethane	✔	Meets Requirements	X	X	X	X	X	X	✓	X	X
Surethane 85™	(PU) Polyurethane	X	X	X	X	X	X	X	X	✓	X	X
Surethane UV™	(PU) Polyurethane	X	X	X	X	X	X	X	X	X	X	X
Nylochem®	Polyamide 12 (Nylon 12)	X	X	X	X	X	X	X	X	X	X	X
Value-Tube™	LLDPE	X	✔	X	X	X	✔	X	X	X	X	X
Vinyl-Flex™	PVC	X	✔	X	X	X	✔	X	✔	✔	X	✔
Mercury™	PTFE	X	X	✔	X	X	✔	X	X	X	✔	✔
Venus™	FEP	X	X	✔	X	X	✔	X	X	X	✔	✔
Armor-Weld™	(PU) Polyurethane	X	X	X	X	X	X	X	✔	✔	✔	X
MonoShield®	(PU) Polyurethane	X	X	X	X	X	X	X	X	X	✔	X
Technibond®	(PU) Polyurethane	X	X	X	X	X	X	X	X	X	X	X
Dura-Pure®	Reinforced PVC	X	✔	X	✔	✔	✔	✔	✔	✔	X	✔

NSF 51®: Requirements for materials used in manufacturing of commercial food service equipment and components
NSF 61®: Requirements for water treatment and distribution products, drinking water.
ASTM-D3295: Standard for the manufacture of PTFE tubing
FDA Compliant: Standard set by Food and Drug Administration for use with Plastics
PAHS: Absence of Polycyclic Aromatic Hydrocarbons in its composition.
REACH/Prop 65: European/California Standard where a listing of prohibited chemicals is provided.
RoHS: Standards set forth, where a list of chemicals cannot exceed a specified concentration.
UL 94 VO: Standard set by Underwriter Laboratories that specifies burn rates, flammability, and self-extinguishing.
USP Class VI: Tests performed by United States Pharmacopeia to test the biocompatibility/toxicity of materials.

98A Polyurethane Tubing

SURETHANE®

NSF 51® POLYURETHANE

Surethane® Polyurethane Tubing is extruded by ATP from ether-based resin, providing excellent resistance to hydrolysis and oil. Surethane's 98A durometer construction provides abrasion-resistance and memory support.

- Certified for Direct Contact with Food Components and Equipment
- Superior Kink-Resistance
- Excellent Flexibility over a Broad Temperature Range
- Abrasion-Resistant
- Largest Size and Color Range in ATP's Offering
- Resists Moisture Absorption
- Resistant to Harmful UV Rays (Black Only)

PU 18 A BK

Material	
PU	98A PU

Outside Diameter	
18	1/8"
04M/532	4mm / 5/32"
316	3/16"
14	1/4"
08M/516	8mm / 5/16"
38	3/8"
12	1/2"
916	9/16"
58	5/8"
34	3/4"
06M	6mm
10M	10mm
12M	12mm
16M	16mm

Package Lengths	
A	100'
B	250'
C	500'
D	1,000'
E	25m
F	100m

Color Code	
BK	Black
C	Clear
CB	Clear Blue
CG	Clear Green
CR	Clear Red
G	Green
GY	Gray
LB	Light Blue
LG	Light Green
NB	Navy Blue
OR	Orange
R	Red
W	White
Y	Yellow

Specifications	
Temperature Range	-40°F to 160°F*
Vacuum Rating	28" HG
Tolerance (1/8" to 1/2")	+/- .005"
Tolerance (9/16" to 3/4")	+/- .006"
Hardness	Shore 98A
Safety Factor	3:1
Material	PU (Polyurethane)
Pressure Range	See Charts
Media	Gases & Liquids
Tariff Code	3917.32.0000
*Note: Green, Clear Green, Yellow, -40°F to 150°F	

Certifications/Compliance
ROHS Compliant
UL94HB Compliant
NSF 51® Certified
Meets NSF 61® Requirements

Fitting Compatibility
Technifit™ Push to Connect (Page 52 - 173)
Compression
Hose-Barb (Page 251)

Note: See Back Cover or Website for Chemical Compatibility

Material Availability by Color Code														
Model	BK	C	CB	CG	CR	G	GY	LB	LG	NB	OR	R	W	Y
PU18	X	✓	X	X	X	X	X	X	X	X	X	X	X	X
PU04M/532	✓	✓	✓	X	X	✓	X	✓	X	✓	X	✓	X	✓
PU316	X	✓	X	X	X	X	X	X	X	X	X	X	X	X
PU14	✓	✓	✓	X	X	✓	✓	✓	X	✓	X	✓	✓	✓
PU08M/516	✓	✓	✓	X	X	✓	X	✓	X	✓	X	✓	✓	✓
PU38	✓	✓	✓	X	✓	✓	LQ	✓	X	✓	X	✓	✓	✓
PU12	✓	✓	✓	X	X	LQ	LQ	LQ	LQ	✓	X	✓	✓	LQ
PU916	X	✓	✓	X	X	X	X	X	X	✓	X	X	X	X
PU58	X	X	X	X	X	X	X	X	X	X	X	X	X	X
PU34	LQ	X	✓	X	LQ	X	X	X	X	LQ	X	X	X	X
PU06M	✓	✓	✓	X	X	✓	X	✓	X	✓	X	✓	X	✓
PU10M	✓	✓	✓	X	X	✓	X	✓	X	✓	X	✓	X	✓
PU12M	✓	✓	✓	X	X	✓	X	✓	X	✓	X	✓	X	✓
PU16M	✓	✓	LQ	X	X	X	X	X	X	X	X	X	X	X

✓ = Standard Lead Time X = Non-Stock, Minimum Runs Required LQ = Limited Quantities

Availability is Subject to Change, Contact ATP

MADE IN USA

NSF

SURETHANE® NSF51® POLYURETHANE TUBING

Fractional Sizes

Part Number (Add Color)	OD	ID	Length	Wall Thickness	Bend Radius	Working Pressure at 75°F	Package Weight
PU18A_	0.125" (1/8")	0.062"	100'	0.031"	0.200"	240 psi	0.50 lb
PU18B_			250'				1.25 lb
PU18C_			500'				2.50 lb
PU18D_			1,000'				5.00 lb
PU04M/532A_	0.156" (5/32")	0.093" (3/32")	100'	0.031"	0.250"	200 psi	0.70 lb
PU04M/532B_			250'				1.75 lb
PU04M/532C_			500'				3.50 lb
PU04M/532D_			1000'				7.00 lb
PU316A_	0.187" (3/16")	0.125" (1/8")	100'	0.031"	0.339"	150 psi	1.01 lb
PU316B_			250'				2.53 lb
PU316C_			500'				5.05 lb
PU316D_			1000'				10.10 lb
PU14A_	0.250" (1/4")	0.156" (5/32")	100'	0.047"	0.476"	180 psi	1.50 lb
PU14B_			250'				3.75 lb
PU14C_			500'				7.50 lb
PU14D_			1000'				15.00 lb
PU08M/516A_	0.313" (5/16")	0.187" (3/16")	100'	0.063"	0.594"	175 psi	2.60 lb
PU08M/516B_			250'				6.50 lb
PU08M/516C_			500'				13.00 lb
PU08M/516D_			1000'				26.00 lb
PU38A_	0.375" (3/8")	0.250" (1/4")	100'	0.063"	1.000"	150 psi	3.40 lb
PU38B_			250'				8.50 lb
PU38C_			500'				17.00 lb
PU38D_			1000'				34.00 lb
PU12A_	0.500" (1/2")	0.328" (21/64")	100'	0.086"	1.102"	150 psi	5.60 lb
PU12B_			250'				14.90 lb
PU12C_			500'				28.05 lb
PU916A_	0.562" (9/16")	0.375" (3/8")	100'	0.093"	1.375"	140 psi	7.50 lb
PU916B_			250'				18.75 lb
PU58A_	0.625" (5/8")	0.406" (13/32")	100'	0.109"	1.375"	140 psi	9.50 lb
PU58B_			250'				23.75 lb
PU34A_	0.750" (3/4")	0.500" (1/2")	100'	0.125"	1.500"	140 psi	14.90 lb
PU34B_			250'				37.25 lb

Note: See Back Cover or Website for Chemical Compatibility

SURETHANE® NSF51® POLYURETHANE TUBING

Metric Sizes

Part Number (Add Color)	OD	ID	Length	Wall Thickness	Bend Radius	Working Pressure at 75°F	Package Weight
PU04M/532A_	4mm	2.4mm	100'	0.78mm	6.35mm	200 psi (13,7 Bar)	0.70 lb
PU04M/532B_			250'				1.75 lb
PU04M/532C_			500'				3.50 lb
PU04M/532D_			1000'				7.00 lb
PU04M/532E_			25m				0.57 lb
PU04M/532F_			100m				2.30 lb
PU06MA_	6mm	4mm	100'	1.00mm	12mm	180 psi (12,4 Bar)	1.30 lb
PU06MB_			250'				3.24 lb
PU06MC_			500'				6.48 lb
PU06MD_			1000'				13.00 lb
PU06ME_			25m				1.07 lb
PU06MF_			100m				4.28 lb
PU08M/516A_	8mm	5mm	100'	1.60mm	15mm	175 psi (12 Bar)	2.60 lb
PU08M/516B_			250'				6.50 lb
PU08M/516C_			500'				13.00 lb
PU08M/516D_			1000'				26.00 lb
PU08M/516E_			25m				2.13 lb
PU08M/516F_			100m				8.53 lb
PU10MA_	10mm	6.5mm	100'	1.75mm	25mm	150 psi (10,3 Bar)	3.90 lb
PU10MB_			250'				9.75 lb
PU10MC_			500'				19.50 lb
PU10ME_			25m				3.25 lb
PU10MF_			100m				12.76 lb
PU12MA_	12mm	8mm	100'	2.00mm	28mm	150 psi (10,3 Bar)	5.30 lb
PU12MB_			250'				13.25 lb
PU12MC_			500'				26.50 lb
PU12ME_			25m				4.39 lb
PU12MF_			100m				17.34 lb
PU16MA_	16mm	11mm	100'	2.50mm	30mm	150 psi (10,3 Bar)	9.50 lb
PU16MB_			250'				23.75 lb
PU16ME_			25m				7.79 lb
PU16MF_			100m				31.16 lb

Note: See Back Cover or Website for Chemical Compatibility

NSF

MADE IN USA

85A Polyurethane Tubing

SURETHANE 85™

ULTRA-FLEXIBLE POLYURETHANE

Surethane 85™ Polyurethane Tubing is an ultra-flexible, 85A durometer version of Surethane® Polyurethane Tubing. Surethane 85™ is intended for applications where extra flexibility is required.

- Shore 85A Durometer
- Enhanced Flexibility compared to 98A Surethane®
- Ether-Based Resin, Resists Hydrolysis and Oil
- Kink-Resistant
- Abrasion-Resistant

SPU 14 A BK

Material	
SPU	85A PU

Tubing OD x ID	
18	1/8" x 1/16"
14	1/4" x 1/8"
516	5/16" x 3/16"
38	3/8" x 1/4"
12	1/2" x 3/8"

Package Size	
A	100' (Roll)
C	500' (Spool)

Color	
BK	Black
R	Red
NB	Navy Blue
G	Green
Y	Yellow

Specifications	
Temperature Range	-40°F to 160°F
Tolerance	+/_ .005"
Hardness	Shore 85A
Safety Factor	3:1
Material	PU (Polyurethane)
Pressure Range	See Charts
Media	Gases & Liquids
Tariff Code	3917.32.0000

Material Availability by Color Code					
Model	Bk	R	NB	G	Y
SPU18	X	✓	✓	X	X
SPU14	X	✓	✓	✓	✓
SPU516	X	✓	✓	✓	✓
SPU38	X	✓	✓	✓	✓
SPU12	X	✓	✓	✓	✓

✓= Standard Lead Time X = Non-Stock, Minimum Runs Required

Availability is Subject to Change, Contact ATP

Certifications/Compliance
ROHS Compliant
UL94VO Compliant

Fitting Compatibility
Hose-Barb (Page 251)

Part Number (Add Color)	OD	ID	Length	Wall Thickness	Bend Radius	Working Pressure at 75°F	Package Weight
SPU18A_	0.125" (1/8")	0.062" (1/16")	100'	0.031"	0.187"	150psi	0.50 lb
SPU18C_			500'				2.50 lb
SPU14A_	0.250" (1/4")	0.125" (1/8")	100'	0.062"	0.500"	160psi	1.50 lb
SPU14C_			500'				7.50 lb
SPU08M/516A_	0.313" (5/16")	0.187" (3/16")	100'	0.062"	0.625"	110psi	2.60 lb
SPU08M/516C_			500'				13.00 lb
SPU38A_	0.375" (3/8")	0.250" (1/4")	100'	0.062"	0.750"	100psi	3.40 lb
SPU38C_			500'				17.00 lb
SPU12A_	0.500" (1/2")	0.375" (3/8")	100'	0.062"	2.000"	70psi	5.60 lb
SPU12C_			500'				28.05 lb

UV - Stabilized Polyurethane Tubing

SURETHANE UV™

POLYURETHANE

Surethane UV™ Polyurethane tubing is extruded from ether-based UV-resistant resin. Not only does this tubing offer excellent resistance to hydrolysis and oil, but it offers increased resistance to UV rays from sunlight.

- Stabilized Against Harmful UV Rays
- Ideal for Applications with Exposure to Natural Sunlight
- Superior Kink-Resistance
- Excellent Flexibility over a Broad Temperature Range
- Abrasion-Resistant
- Resists Moisture Absorption

PUV 14 A BK

Material	
PUV	Surethane UV™

Outside Diameter	
14	1/4"
38	3/8"
12	1/2"

Package Lengths	
A	100'
C	500'

Color Code	
BK	Black

Specifications	
Temperature Range	-40°F to 160°F
Vacuum Rating	28" HG
Tolerance (1/8" to 1/2")	+/- .005"
Tolerance (9/16" to 3/4")	+/- .006"
Hardness	Shore 98A
Safety Factor	3:1
Material	PU (Polyurethane)
Pressure Range	See Charts
Media	Gases & Liquids
Tariff Code	3917.32.0000

Material Availability by Color Code	
Model	Bk
PUV14ABK	✓
PUV14CBK	✓
PUV38ABK	✓
PUV38CBK	✓
PUV12ABK	✓
PUV12CBK	✓

✓ = Standard Lead Time X = Non-Stock, Minimum Runs Required

Availability is Subject to Change, Contact ATP

Certifications/Compliance
ROHS Compliant
UL94HB Compliant

Fitting Compatibility
Technifit™ Push to Connect (Page 52 - 173)
Compression
Hose-Barb (Page 251)

Note: See Back Cover or Website for Chemical Compatibility

Fractional Sizes

Part Number	OD	ID	Length	Wall Thickness	Bend Radius	Working Pressure at 75°F	Package Weight
PUV14ABK	0.250" (1/4")	0.156" (5/32")	100'	0.047"	0.476"	180 psi	1.50 lb
PUV14CBK			500'				7.50 lb
PUV38ABK	0.375" (3/8")	0.250" (1/4")	100'	0.063"	1.000"	150 psi	3.40 lb
PUV38CBK			500'				17.00 lb
PUV12ABK	0.500" (1/2")	0.328" (21/64")	100'	0.086"	1.100"	150 psi	5.60 lb
PUV12CBK			500'				28.05 lb

MADE IN USA

Nylon 12 Tubing

NYLOCHEM®

NYLON 12

Nylochem® Nylon 12 Tubing is well-suited for applications that require increased working pressure and temperatures.

- Thinner Wall Enables Higher Flow Rates
- Higher Working Pressure Compared with PE and PU
- Wider Temperature Range Compared with PE and PU
- Low Moisture Absorbtion Rates
- Abrasion-Resistant
- Broad Resistance to Chemicals
- Stabilized Against Harmful UV Rays
- Ideal for Outdoor Use, Superior Stress Crack Resistance

Specifications	
Temperature Range	-60°F to 200°F
Vacuum Rating	28" HG
Tolerance (1/8" to 1/4")	+/- .005"
Tolerance (3/8" to 1/2")	+/- .006"
Hardness	Shore 70D / Rockwell 78R
Safety Factor	4:1
Material	Nylon 12 (Polyamide 12)
Pressure Range	See Charts
Media	Gases & Liquids
Tariff Code	3917.32.0000

Fitting Compatibility
Technifit™ Push to Connect (Page 52 - 173)
Compression

Note: See Back Cover or Website for Chemical Compatibility

N 18 A BK

Material	
N	Nylon (PA) 12

Outside Diameter	
18	1/8"
04M/532	4mm / 5/32"
14	1/4"
14x150	1/4" x 0.150"
08M/516	8mm / 5/16"
38	3/8"
38x215	3/8" x 0.215"
12	1/2"
58	5/8"
06M	6mm
10M	10mm
12M	12mm
14M	14mm

Package Lengths	
A	100'
B	250'
C	500'
D	1,000'
E	25m
F	100m

Color Code	
BK	Black
G	Green
GY	Gray
NA	Natural
NB	Navy Blue
OR	Orange
R	Red
S	Silver
Y	Yellow

Material Availability by Color Code									
Model	BK	NB	G	GY	NA	OR	R	S	Y
N18	✓	✓	X	X	✓	X	✓	X	✓
N04M/532	✓	✓	✓	X	✓	X	✓	X	✓
N14	✓	✓	✓	X	✓	✓	✓	X	✓
N14x150	✓	X	X	X	✓	X	X	X	X
N08N/516	✓	✓	X	X	✓	X	✓	X	X
N38	✓	✓	✓	X	✓	X	✓	X	✓
N38x215	X	X	X	X	X	X	X	X	X
N12	✓	✓	X	X	✓	X	✓	X	X
N58	X	X	X	X	X	X	X	X	✓
N06M	✓	✓	✓	X	✓	X	✓	X	✓
N10M	✓	✓	X	X	✓	X	X	X	X
N12M	✓	✓	X	X	✓	X	X	X	X
N14M	X	X	X	X	X	X	X	X	X
N16M	X	X	X	X	X	X	X	X	X
Availability is Subject to Change, Contact ATP									

NYLOCHEM®
NYLON 12

Fractional Sizes

Part Number (Add Color)	OD	ID	Length	Wall Thickness	Bend Radius	Working Pressure at 75°F	Package Weight
N18A_	0.125" (1/8")	0.080"	100'	0.022"	0.375"	420 psi	0.35 lb
N18B_*			250'				0.88 lb
N18C_			500'				1.75 lb
N18D_			1,000'				3.50 lb
N04M/532A_	0.156" (5/32")	0.106"	100'	0.025"	0.500"	350 psi	0.45 lb
N04M/532B_*			250'				1.13 lb
N04M/532C_			500'				2.25 lb
N04M/532D_			1,000'				4.50 lb
N14A_	0.250" (1/4")	0.180"	100'	0.035"	1.250"	290 psi	1.04 lb
N14B_*			250'				2.60 lb
N14C_			500'				5.20 lb
N14D_			1,000'				10.40 lb
N14x150A_		0.150"	100'	0.050"	0.750"	800 psi	1.40 lb
N14x150C_			500'				6.80 lb
N08M/516A_	0.314" (5/16")	0.236"	100'	0.039"	1.496"	250 psi	1.50 lb
N08M/516B_*			250'				3.75 lb
N08M/516C_			500'				7.50 lb
N08M/516D_			1,000'				15.00 lb
N38A_	0.375" (3/8")	0.275"	100'	0.050"	2.000"	250 psi	2.26 lb
N38B_*			250'				5.65 lb
N38C_			500'				11.30 lb
N38D_			1,000'				22.60 lb
N38x215A_		0.215"	100'	0.082"	1.000"	883 psi	3.20 lb
N38x215C_			500'				16.0 lb
N12A_	0.500" (1/2")	0.375" (3/8")	100'	0.062"	3.500"	240 psi	3.80 lb
N12B_*			250'				9.50 lb
N12C_			500'				19.00 lb
N58A_	0.625" (5/8")	0.500" (1/2")	100'	0.062"	4.250"	210 psi	4.70 lb
N58C_			500'				23.50 lb
Note: * Indicates Non-Stock Packaged Length							

Note: See Back Cover or Website for Chemical Compatibility

NYLOCHEM®
NYLON 12

Metric Sizes

Part Number (Add Color)	OD	ID	Length	Wall Thickness	Bend Radius	Working Pressure at 75°F	Package Weight
N04M/532A_	4mm	2.7mm	100'	0.65mm	12.7mm	350 psi (24,1 bar)	0.45 lb
N04M/532B_*			250'				1.13 lb
N04M/532C_			500'				2.25 lb
N04M/532D_			1,000'				4.50 lb
N04M/532E_			25m				0.40 lb
N04M/532F_			100m				2.00 lb
N06ME_	6mm	4mm	25m	1.00mm	31.8mm	340 psi (23,4 bar)	0.90 lb
N06MF_			100m				3.60 lb
N08M/516A_	8mm	6mm	100'	1.00mm	38.0mm	250 psi (17,2 bar)	1.50 lb
N08M/516B_*			250'				3.75 lb
N08M/516C_			500'				7.50 lb
N08M/516D_			1,000'				15.00 lb
N08M/516E_			25m				1.23 lb
N08M/516F_			100m				4.92 lb
N10ME_	10mm	8mm	25m	1.00mm	51.0mm	225 psi (15,5 bar)	1.56 lb
N10MF_			100m				6.23 lb
N12ME_	12mm	10mm	25m	1.00mm	63.5mm	200 psi (13,7 bar)	1.89 lb
N12MF_			100m				7.55 lb
N14ME_	14mm	11mm	25m	1.50mm	100.0mm	175 psi (12 bar)	2.91 lb
N14MF_			100m				11.64 lb
Note: * Indicates Non-Stock Packaged Length							

Note: See Back Cover or Website for Chemical Compatibility

MADE IN USA

LLDPE Polyethylene NSF 61® Tubing (Formerly Imbibe™)

VALUE-TUBE™

NSF61® POLYETHYLENE LLDPE

Value-Tube™ NSF 61® Linear Low-Density Polyethylene Tubing is extruded from 100% non-toxic, **NSF 61® and FDA-Compliant** ingredients.

Value-Tube™ and Imbibe™ PE Tubing lines have been merged, simplifying ordering and stocking at the distributor level.

Note: Until the product transition is complete, order DWPE part numbers if NSF-61® Certification is required. ATP will ship the appropriate product.

- Certified for Direct Contact with Potable Water, Food & Beverage
- Chemically-Inert
- Good Dielectric Properties
- Impermeable to Both Gas and Liquids

Specifications	
Temperature Range	-50°F to 140°F
Vacuum Rating	28" HG
Tolerance (1/8" to 1/4")	+/- .005"
Tolerance (3/8" to 1/2")	+/- .006"
Tolerance (3/4" to 5/8")	+/- .008"
Tolerance (1"+)	+/- .010"
Hardness	Shore 98A
Safety Factor	3:1
Material	LLDPE (Linear Low-Density Polyethylene)
Pressure Range	See Charts
Media	Gases & Liquids
Tariff Code	3917.32.0000

Certifications/Compliance
FDA Compliant
NSF 61® Certified

Fitting Compatibility
Technifit™ Push to Connect (Page 52 - 173)
Compression
Hose-Barb (Page 251)
Fluidfit™ NSF 61® Push to Connect (Page 174 - 196)

Note: See Back Cover or Website for Chemical Compatibility

PE 18 A BK

Material	
PE	LLDPE

Outside Diameter	
18	1/8"
04M/532	4mm / 5/32"
14	1/4"
08M/516	8mm / 5/16"
38	3/8"
12	1/2"
58	5/8"
34	3/4"
1	1"
06M	6mm
10M	10mm
12M	12mm

Package Lengths	
A	100'
B	250'
C	500'
D	1,000'

Color Code	
BK	Black
G	Green
NA	Natural
NB	Navy Blue
OR	Orange
R	Red
Y	Yellow

Material Availability by Color Code							
Model	BK	NB	G	NA	OR	R	Y
PE18	X	X	X	LQ	X	X	X
PE04M/532	LQ	X	X	X	X	LQ	X
PE14	✓	✓	✓	✓	X	✓	LQ
PE1418	LQ	X	X	✓	X	X	X
PE08M/516	✓	X	X	✓	X	X	X
PE38	✓	✓	LQ	✓	X	✓	LQ
PE12	✓	✓	LQ	✓	X	LQ	LQ
PE58	LQ	X	X	✓	X	X	X
PE34	X	X	X	X	X	X	X
PE1	X	X	X	X	X	X	X
PE06M	LQ	LQ	X	LQ	X	X	X
PE10M	LQ	X	X	LQ	X	X	X
PE12M	LQ	X	X	X	X	X	X

✓ = Standard Lead Time X = Extended Lead Time, Minimum Runs Apply
LQ = Limited Quantities, Contact ATP
Availability is Subject to Change, Contact ATP

MADE IN USA

VALUE-TUBE™
POLYETHYLENE LLDPE

MADE IN USA

See Note

Fractional Sizes

Value-Tube™ Part Number (Insert Color)	Imbibe™ Part Number (Insert Color)	OD	ID	Length	Wall Thickness	Bend Radius	Working Pressure at 75°F	Package Weight
PE18A_		0.125" (1/8)	0.080"	100'	0.022"	0.15"	250 psi	0.50 lb
PE18C_				500'				2.50 lb
PE18D_				1,000'				4.50 lb
PE04M/532A_	DWPE04M/532A_	0.156" (5/32")	0.106"	100'	0.025"	1.00"	180 psi	0.60 lb
PE04M/532B_*	DWPE04M/532B_*			250'				1.50 lb
PE04M/532C_	DWPE04M/532C_			500'				3.00 lb
PE04M/532D_	DWPE04M/532D__			1,000'				6.00 lb
PE14A_	DWPE14A_	0.250" (1/4")	0.170"	100'	0.040"	1.25"	150 psi	1.20 lb
PE14B_*	DWPE14B_*			250'				3.00 lb
PE14C_	DWPE14C_			500'				6.00 lb
PE14D_	DWPE14D_			1,000'				12.00 lb
PE1418A_			0.125"	100'	0.062"	1.00"	350 psi	1.40 lb
PE1418B_*				250'				3.50 lb
PE1418C_				500'				7.00 lb
PE1418D_				1,000'				14.00 lb
PE08M/516A_	DWPE08M/516A_	0.313" (5/16")	0.236"	100'	0.038"	1.50"	150 psi	1.50 lb
PE08M/516B_*	DWPE08M/516B_*			250'				3.75 lb
PE08M/516C_	DWPE08M/516C_			500'				7.50 lb
PE08M/516D_	DWPE08M/516D_			1,000'				15.00 lb
PE38A_	DWPE38A_	0.375" (3/8")	0.250" (1/4")	100'	0.062"	2.00"	150 psi	3.00 lb
PE38B_*	DWPE38B_*			250'				7.00 lb
PE38C_	DWPE38C_			500'				14.00 lb
PE38D_	DWPE38D_			1,000'				25.00 lb
PE12A_	DWPE12A_	0.500" (1/2")	0.375" (3/8")	100'	0.062"	2.50"	125 psi	3.40 lb
PE12B_*	DWPE12B_*			250'				8.50 lb
PE12C_	DWPE12C_			500'				17.00 lb
PE58A_		0.625" (5/8")	0.500" (1/2")	100'	0.062"	3.00"	100 psi	5.00 lb
PE58B_*				250'				12.50 lb
PE58C_				500'				25.00 lb
PE34A_		0.750" (3/4")	0.625" (5/8")	100'	0.062"	4.00"	100 psi	5.50 lb
PE1A_		1.000"	0.750" (3/4")	100'	0.125"	4.00"	150 psi	13.70 lb
Note: * Indicates Non-Stock Packaged Length								

Note: See Back Cover or Website for Chemical Compatibility

Note: Note: Until the product transition is complete, order DWPE part numbers if NSF-61® Certification is required. ATP will ship the appropriate product.

NSF

MADE IN USA

VALUE-TUBE™

POLYETHYLENE LLDPE

See Note

Metric Sizes

Value-Tube™ Part Number (Insert Color)	Imbibe™ Part Number (Insert Color)	OD	ID	Length	Wall Thickness	Bend Radius	Working Pressure at 75°F	Package Weight
PE04M/532A_	DWPE04M/532A_	4mm	2.7mm	100'	0.65mm	25.4mm	180 psi (12,4 Bar)	0.60 lb
PE04M/532B_*	DWPE04M/532B_*			250'				1.50 lb
PE04M/532C_	DWPE04M/532C_			500'				3.00 lb
PE04M/532D_	DWPE04M/532D_			1,000'				6.00 lb
PE06MA_	DWPE06MA_	6mm	4mm	100'	1.00mm	31.8mm	150 psi (10,3 Bar)	1.10 lb
PE06MB_*	DWPE06MB_*			250'				2.75 lb
PE06MC_	DWPE06MC_			500'				5.50 lb
PE06MD_	DWPE06MD_			1,000'				11.00 lb
PE08M/516A_	DWPE08M/516A_	8mm	6mm	100'	1.00mm	38.1mm	150 psi (10,3 Bar)	1.50 lb
PE08M/516B_*	DWPE08M/516B_*			250'				3.75 lb
PE08M/516C_	DWPE08M/516C_			500'				7.50 lb
PE08M/516D_	DWPE08M/516D_			1,000'				15.00 lb
PE10MA_	DWPE10MA_	10mm	8mm	100'	1.00mm	51.0mm	125 psi (8,6 Bar)	2.10 lb
PE10MB_*	DWPE10MB_*			250'				5.25 lb
PE10MC_	DWPE10MC_			500'				10.50 lb
PE12MA_	DWPE12MA_	12mm	9mm	100'	1.50mm	63.5mm	100 psi (6,9 Bar)	2.50 lb
PE12MB_*	DWPE12MB_*			250'				6.50 lb
PE12MC_	DWPE12MC_			500'				13.00 lb
Note: * Indicates Non-Stock Packaged Length								

Note: See Back Cover or Website for Chemical Compatibility

Note: Note: Until the product transition is complete, order DWPE part numbers if NSF-61® Certification is required. ATP will ship the appropriate product.

NSF

PTFE Tubing

MERCURY™ PTFE

Mecury™ PTFE Tubing is a great choice for high-heat and/or advanced chemical resistance applications.

- Does Not Support Combustion
- Excellent Dielectric Properties
- Chemically Inert
- Widest Temperature Range of ATP's Offering

PTFE 18 A NA

Material		Size OD x ID	Package Lengths		Color Code	
PTFE	PTFE		A	100'	NA	Natural

Specifications	
Temperature Range	-454°F to 500°F
Vacuum Rating	28" HG
Tolerance (1/8")	+/-.004"
Tolerance (1/4 to 3/8")	+/-.005"
Hardness	Shore 55D
Safety Factor	4:1
Material	PTFE (Polytetraflouroethylene)
Pressure Range	See Charts
Media	Gases & Liquids
Tariff Code	3917.32.0000

Certifications/Compliance
USP Class VI
UL 94 VO
ASTM – D3295
FDA Compliant

Fitting Compatibility
Technifit™ Push to Connect (Page 52 - 173)
Compression
Hose-Barb (Page 251)

Note: See Back Cover or Website for Chemical Compatibility

Fractional & Metric Sizes

Part Number	OD	ID	Length	Wall Thickness	Bend Radius	Working Pressure at 75°F	Package Weight
PTFE18ANA	0.125" (1/8")	0.063"	100'	0.031"	0.39"	381 psi	1.14 lb
PTFE14-18ANA	0.250" (1/4")	0.125" (1/8")	100'	0.063"	1.18"	372 psi	2.29 lb
PTFE14-532ANA		0.156" (5/32")		0.047"	1.97"	275 psi	2.02 lb
PTFE14-316ANA		0.188" (3/16")		0.031"	2.56"	174 psi	1.75 lb
PTFE38ANA	0.375" (3/8")	0.250" (1/4")	100'	0.063"	4.33"	240 psi	5.84 lb
PTFE438-38ANA	0.438"	0.375" (3/8")	100'	0.032"	4.50"	95 psi	6.0 lb
PTFE12ANA	0.500" (1/2")	0.375" (3/8")	100'	0.063"	6.50"	150 psi	6.5 lb
PTFE04MANA	4mm	2.5mm	100'	0.75mm	25mm	292 psi (20,1 Bar)	1.51 lb
PTFE06MANA	6mm	4mm	100'	1.00mm	40mm	275 psi (18,9 Bar)	2.29 lb
PTFE08MANA	8mm	6mm	100'	1.00mm	60mm	180 psi (12,4 Bar)	3.20 lb
PTFE10MANA	10mm	8mm	100'	1.00mm	75mm	133 psi (9,1 Bar)	4.13 lb
PTFE12MANA	12mm	10mm	100'	1.00mm	100mm	120 psi (8,2 Bar)	6.00 lb

FEP Tubing

VENUS™

F E P

Venus™ FEP tubing is a more flexible, durable alternative to PTFE. Venus™ features low permeability with UV resistance. All Venus™ tubing is semi-clear in color.

- Economical Alternative to PTFE
- Easily Cleaned
- Chemically Inert
- UV-Resistant
- Low Permeability

FEP 18 A

Material	
FEP	FEP

Size OD x ID	
18	1/8" x .063"
14-18	1/4" x 1/8"
14-532	1/4" x 5/32"
14-316	1/4" x 3/16"
38	3/8" x 1/4"
12	1/2" x 3/8"
04M	4x2.5mm
06M	6x4mm
08M	8x6mm
10M	10x8mm
12M	12x10mm

Package Lengths	
A	100'

Specifications	
Temperature Range	-400°F to 400°F
Vacuum Rating	28" HG
Tolerance (1/8")	+/-.004"
Tolerance (1/4 to 3/8")	+/-.005"
Hardness	Shore 55D
Safety Factor	3:1
Material	FEP (Flourinated Ethylene Propylene)
Pressure Range	See Charts
Media	Gases & Liquids
Tariff Code	3917.32.0000

Certifications/Compliance
USP Class VI
UL 94 VO
ASTM – D3295
FDA Compliant

Fitting Compatibility
Technifit™ Push to Connect (Page 52 - 173)
Compression
Hose-Barb (Page 251)

Note: See Back Cover or Website for Chemical Compatibility

Fractional Sizes

Part Number	OD	ID	Length	Wall Thickness	Bend Radius	Working Pressure at 75°F	Package Weight
FEP18ANA	0.125 (1/8")	0.063 (1/16")	100'	0.031	0.39	381 psi	1.14 lb
FEP14-18ANA	0.250" (1/4")	0.125" (1/8")	100'	0.063"	1.18"	400 psi	1.14 lb
FEP14-532ANA		0.156" (5/32")		0.047"	1.97"	300 psi	2.29 lb
FEP14-316ANA		0.188" (3/16)		0.031"	2.56"	174 psi	1.75 lb
FEP38ANA	0.375" (3/8")	0.250" (1/4")	100'	0.063"	4.33"	240 psi	5.84 lb
FEP12ANA	0.500" (1/2")	0.375" (3/8")	100'	0.063"	6.50"	180 psi	6.50lb

Metric Sizes

Part Number	OD	ID	Length	Wall Thickness	Bend Radius	Working Pressure at 75°F	Package Weight
FEP04MANA	4mm	2.5mm	100'	0.75mm	25mm	292 psi (20.1 Bar)	1.51 lb
FEP06MANA	6mm	4mm	100'	1.00mm	40mm	175 psi (12.0 Bar)	2.29 lb
FEP08MANA	8mm	6mm	100'	1.00mm	60mm	180 psi (12.4 Bar)	3.20 lb
FEP10MANA	10mm	8mm	100'	1.00mm	75mm	133 psi (9.1 Bar)	4.13 lb
FEP12MANA	12mm	10mm	100'	1.00mm	100mm	120 psi (8.7 Bar)	6.00 lb

Weld Spatter Resistant Tubing

ARMOR-WELD™
COVERED WELD SPATTER

Armor-Weld™ Spatter Resistant Tubing is specifically designed for use near welding operations. The protective olefin flame-resistant jacket provides protection against **direct** exposure to weld sparks.

- Armored Jacket Protects Tubing in Welding Environments
- Superior Kink-Resistance
- High Abrasion-Resistance
- UV-Resistant
- Oil-Resistant
- Flame-Retardant Cover
- Resists Hydrolysis
- Ozone-Resistant
- Connections are Made by Stripping Jacket and Exposing Tubing Core

Specifications	
Temperature Range	-68°F to 140°F*
Vacuum Rating	28" HG
Hardness	Shore 98A
Safety Factor	3:1
Material	PU w/ Olefin Jacket (Polyurethane)
Pressure Range	See Charts
Media	Gases & Liquids
Tariff Code	3917.32.0000

Certifications/Compliance
UL94VO (Outer Jacket)
UL Yellow Card Listed
RoHs/Reach Compliant

Fitting Compatibility
Technifit™ Push to Connect (Page 52 - 173)
Compression
Hose-Barb (Page 251)

Material Availability by Color Code						
Model	BK	G	LB	R	Y	W
LE04M/532	✓	X	✓	X	✓	X
LE14	✓	X	✓	✓	X	X
LE08M/516	✓	✓	✓	✓	✓	✓
LE38	✓	X	✓	✓	X	X
LE12	✓	✓	✓	X	X	✓
LE06M	✓	✓	✓	✓	✓	✓
LE10M	✓	✓	✓	✓	✓	✓
LE12M	✓	✓	✓	✓	✓	✓

✓ = Standard Lead Time X = Non-Stock, Minimum Runs Required
Availability is Subject to Change, Contact ATP

Note: See Back Cover or Website for Chemical Compatibility

LE 14 A BK

Material	
LE	Weld Spatter PU
2LE	2-Core Weld Spatter PU

Outside Diameter	
04M/532	4mm / 5/32"
14	1/4"
08M/516	8mm / 5/16"
38	3/8"
12	1/2"
06M	6mm
10M	10mm
12M	12mm

Package Lengths	
B	250'
F	328'/100m

Color Code	
BK	Black
G	Green
LB	Light Blue
R	Red
W	White
Y	Yellow

⚠ Warning

This product can expose you to chemicals including Antimony Trioxide which is known to the State of California to cause cancer.

For more information, go to:

www.p65warnings.ca.gov

ARMOR-WELD™
COVERED WELD SPATTER

Fractional Sizes

Part Number (Add Color)	OD	ID	Length	Wall Thickness	Jacket Thickness	Bend Radius	Working Pressure at 75°F	Number Cores	Package Weight
LE04M/532F_	0.156" (5/32")	0.098"	328'/100m	0.029"	0.039"	0.39"	200 psi	1	8.00 lb
2LE04M/532F_								2 (Bonded)	16.00 lb
LE14B_	0.250" (1/4")	0.156" (5/32")	250'	0.047"	0.039"	0.59"	180 psi	1	8.65 lb
2LE14B_								2 (Bonded)	17.30 lb
LE08M/516F_	0.312" (5/16")	0.196"	328'/100m	0.058"	0.039"	0.78"	175 psi	1	15.20 lb
2LE08M/516F_								2 (Bonded)	30.40 lb
LE38B_	0.375" (3/8")	0.250" (1/4")	250'	0.062"	0.039"	0.98"	150 psi	1	15.20 lb
2LE8B_								2 (Bonded)	30.40 lb
LE12B_	0.500" (1/2")	0.328" (21/64")	250'	0.086"	0.039"	1.17"	150 psi	1	23.20 lb
2LE12B_								2 (Bonded)	46.40 lb

Metric Sizes

Part Number (Add Color)	OD	ID	Length	Wall Thickness	Jacket Thickness	Bend Radius	Working Pressure at 75°F	Number Cores	Package Weight
LE04M/532F_	4mm	2.5mm	328'/100m	0.75mm	1mm	10mm	200 psi	1	8.00 lb
2LE04M/532F_								2 (Bonded)	16.00 lb
LE06MF_	6mm	4mm	328'/100m	1.00mm	1mm	15mm	180 psi	1	10.00 lb
2LE06MF_								2 (Bonded)	20.00 lb
LE08M/516F_	8mm	5mm	328'/100m	1.50mm	1mm	20mm	175 psi	1	15.20 lb
2LE08M/516F_								2 (Bonded)	30.40 lb
LE10MF_	10mm	6.5mm	328'/100m	1.75mm	1mm	25mm	150 psi	1	21.60 lb
2LE10MF_								2 (Bonded)	43.20 lb
LE12MF_	12mm	8mm	328'/100m	2.00mm	1mm	30mm	150 psi	1	28.00 lb
2LE12MF_								2 (Bonded)	56.00 lb

Note: See Back Cover or Website for Chemical Compatibility

Single-Core Weld Spatter Tubing

MONOSHIELD®
SINGLE-CORE WELD SPATTER

MonoShield™ Spatter Resistant Tubing is a rubber/polyurethane blended material specifically designed for use near welding operations. Extruded from a single core, there is no extra process required, such as stripping away a jacket. MonoShield provides protection against **indirect** exposure to weld sparks.

- Single-Core Extrusion, No Stripping of Jacket Required
- Suited for Automation Environments
- Superior Kink-Resistance
- Abrasion-Resistant
- UV-Resistant
- Oil-Resistant
- Flame-Resistant
- Resists Hydrolysis

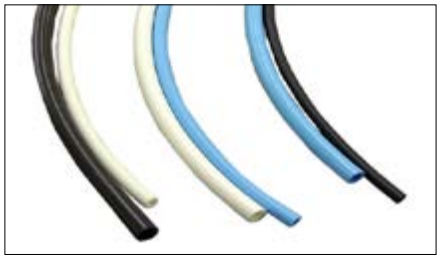

Specifications	
Temperature Range	-68°F to 140°F
Vacuum Rating	28" HG
Hardness	Shore 98A
Safety Factor	3:1
Material	PU w/ Olefin Jacket (Polyurethane)
Pressure Range	See Charts
Media	Gases & Liquids
Tariff Code	3917.32.0000

Certifications/Compliance
UL94VO (Outer Jacket)

Fitting Compatibility
Technifit™ Push to Connect (Page 52 - 173)
Compression
Hose-Barb (Page 251)

Note: See Back Cover or Website for Chemical Compatibility

MS 14 A Y

Material	
MS	Single Core Weld Spatter
2MS	Bonded Weld Spatter

Outside Diameter	
MS04M/532	4mm / 5/32"
MS14	1/4"
MS08M/516	8mm / 5/16"
MS38	3/8"
MS12	1/2"
MS06M	6mm
MS10M	10mm
MS12M	12mm
MS16M	16mm

Package Lengths	
A	100'
B	250'

Color Code	
BK	Black
G	Green
LB	Light Blue
R	Red
W	White
Y	Yellow

Material Availability by Color Code						
Model	BK	G	LB	R	W	Y
MS04M/532	LQ	X	LQ	LQ	X	X
MS14	LQ	X	LQ	LQ	LQ	X
MS08M/516	LQ	LQ	LQ	X	X	X
MS38	LQ	X	LQ	LQ	X	X
MS12	LQ	LQ	LQ	X	LQ	X
MS06M	LQ	X	LQ	X	LQ	X
MS10M	LQ	LQ	LQ	X	X	X
MS12M	LQ	LQ	X	X	X	X
MS16M	X	X	LQ	X	LQ	X

LQ = Limited Quantities X = Non-Stock, Minimum Runs Required
Availability is Subject to Change, Contact ATP

MADE IN USA

MONOSHIELD®

SINGLE-CORE WELD SPATTER

Fractional Sizes

Part Number (Add Color)	OD	ID	Length	Wall Thickness	Bend Radius	Working Pressure at 75°F	Number Tubes	Package Weight
MS04M/532A_	0.156" (5/32")	0.093"	100'	0.312"	0.500"	200 psi	1	0.60 lb
MS04M/532B_			250'					1.50 lb
2MS04M/532A_			100'				2 (Bonded)	1.20 lb
2MS04M/532B_			250'					3.00 lb
MS14A_	0.250" (1/4")	0.156" (5/32")	100'	0.047"	0.625"	180 psi	1	1.50 lb
MS14B_			250'					3.75 lb
2MS14A_			100'				2 (Bonded)	3.00 lb
2MS14B_			250'					7.50 lb
MS08M/516A_	0.312" (5/16")	0.188" (3/16")	100'	0.062"	0.750"	175 psi	1	2.50 lb
MS08M/516B_			250'					6.25 lb
2MS08M/516A_			100'				2 (Bonded)	5.00 lb
2MS08M/516B_			250'					12.50 lb
MS38A_	0.375" (3/8")	0.250" (1/4")	100'	0.062"	1.000"	150 psi	1	3.10 lb
MS38B_			250'					7.75 lb
2MS38A_			100'				2 (Bonded)	6.20 lb
2MS38B_			250'					15.50 lb
MS12A_	0.500" (1/2")	0.328" (21/64")	100'	0.085"	1.250"	150 psi	1	6.10 lb
MS12B_			250'					15.25 lb
2MS12A_			100'				2 (Bonded)	12.20 lb
2MS12B_			250'					30.50 lb

Note: See Back Cover or Website for Chemical Compatibility

MADE IN USA

MONOSHIELD®

SINGLE-CORE WELD SPATTER

Metric Sizes

Part Number (Add Color)	OD	ID	Length	Wall Thickness	Bend Radius	Working Pressure at 75°F	Number Tubes	Package Weight
MS04M/532A_	4mm	2.4mm	100'	0.80mm	127mm	200 psi (13,7 Bar)	1	0.60 lb
MS04M/532B_			250'					1.50 lb
2MS04M/532A_			100'				2 (Bonded)	1.20 lb
2MS04M/532B_			250'					3.00 lb
MS06MA_	6mm	4mm	100'	1.00mm	16mm	150 psi (10,3 Bar)	1	1.50 lb
MS06MB_			250'					3.75 lb
2MS06MA_			100'				2 (Bonded)	3.00 lb
2MS06MB_			250'					7.50 lb
MS08M/516A_	8mm	4.7mm	100'	1.60mm	19mm	175 psi (12 Bar)	1	2.50 lb
MS08M/516B_			250'					6.25 lb
2MS08M/516A_			100'				2 (Bonded)	5.00 lb
2MS08M/516B_			250'					12.50 lb
MS10MA_	10mm	6.5mm	100'	1.75mm	25mm	150 psi (10,3 Bar)	1	3.50 lb
MS10MB_			250'					8.75 lb
2MS10MA_			100'				2 (Bonded)	7.00 lb
2MS10MB_			250'					17.75 lb
MS12MA_	12mm	8mm	100'	2.00mm	30mm	150 psi (10,3 Bar)	1	5.10 lb
MS12MB_			250'					12.75 lb
2MS12MA_			100'				2 (Bonded)	10.20 lb
2MS12MB_			250'					25.50 lb
MS16MA_	16mm	11mm	100'	2.50mm	55mm	110 psi (7,5 Bar)	1	9.00 lb
MS16MB_			250'					22.50 lb
2MS16MA_			100'				2 (Bonded)	18.00 lb
2MS16MB_			250'					45.00 lb

Note: See Back Cover or Website for Chemical Compatibility

Clear PVC NSF 61® Hose

VINYL-FLEX™
NSF 61® PVC

Vinyl-Flex™ is a clear PVC hose suited for low pressure applications of both fluid and compressed gases. Vinyl-Flex PVC meets FDA requirements and is NSF 61® certified, making it ideal for use in food and beverage applications.

- Certified for Direct Contact with Potable Water, Food & Beverage
- Lightweight and Flexible
- Phthalate-Free

Specifications	
Temperature Range	15°F to 150°F
Vacuum Rating	28" HG
Tolerance (1/8" to 1/2")	+.004"/.008"
Tolerance (5/8" to 1")	+.008/-.012"
Tolerance (1.25" to 1.5")	+.012"/-.016"
Tolerance (2" +)	+.016"/-.020"
Hardness	Shore 73A
Safety Factor	3:1
Material	PVC (Polyvinylchloride)
Pressure Range	See Charts
Media	Gases & Liquids
Tariff Code	3917.32.0000

Certifications/Compliance
FDA Compliant
NSF 61®
REACH Compliant
RoHS Compliant
USP Class VI

Fitting Compatibility
Fluid Couplers & Plugs
Hose-Barb (Page 251)

Note: See Back Cover or Website for Chemical Compatibility

PVC 18-14 A NA

Material	
PVC	NSF 61® PVC

Inside Diameter x Outside Diameter	
PVC18-14	1/8" x 1/4"
PVC316-14	3/16" x 1/4"
PVC316-516	3/16" x 5/16"
PVC316-38	3/16" x 3/8"
PVC14-38	1/4" x 3/8"
PVC14-716	1/4" x 7/16"
PVC14-12	1/4" x 1/2"
PVC516-716	5/16" x 7/16"
PVC 516-12	5/16" x 1/2"
PVC 516-916	5/16" x 9/16"
PVC 38-12	3/8" x 1/2"
PVC 38-916	3/8" x 9/16"
PVC 38-58	3/8" x 5/8"
PVC 716-916	7/16" x 9/16"
PVC 12-58	1/2" x 5/8"
PVC 12-1116	1/2" x 11/16"
PVC 12-34	1/2" x 3/4"
PVC 58-34	5/8" x 3/4"
PVC 58-1316	5/8" x 13/16"
PVC 58-78	5/8" x 7/8"
PVC 34-1	3/4" x 1"
PVC 34-54	3/4" x 1 1/4"
PVC 78-118	7/8" x 1 1/8"
PVC 1-54	1" x 1 1/4"
PVC 1-138	1" x 1 3/8"
PVC 54-64	1 1/4" x 1 1/2"
PVC 54-1582	1 1/4" x 1 5/8"
PVC 64-1782	1 1/2" x 1 7/8"
PVC 2-2.52	2" x 2 1/2"

Package Lengths	
A	100'
2A	50'

Color Code	
NA	Clear

VINYL-FLEX™
NSF 61® PVC

Fractional Sizes

Part Number	ID	OD	Length	Wall Thickness	Working Pressure at 75°F	Package Weight
PVC18-14ANA	0.125" (1/8")	0.250" (1/4")	100'	0.187"	65 psi	2.20 lb
PVC316-14ANA*	0.187" (3/16")	0.250" (1/4")	100'	0.031"	50 psi	1.17 lb
PVC316-516ANA		0.313" (5/16")		0.063"	55 psi	2.69 lb
PVC316-38ANA		0.375" (3/8")		0.094"	60 psi	3.75 lb
PVC14-38ANA	0.250" (1/4")	0.375" (3/8")	100'	0.062"	55 psi	3.35 lb
PVC14-716ANA*		0.438" (7/16")		0.094"	55 psi	5.53 lb
PVC14-12ANA		0.500" (1/2")		0.125"	60 psi	7.89 lb
PVC516-716ANA	0.312" (5/16")	0.438" (7/16")	100'	0.063"	50 psi	3.88 lb
PVC516-12ANA*		0.500" (1/2")		0.094"	55 psi	6.37 lb
PVC516-916ANA*		0.563" (9/16")		0.125"	60 psi	9.22 lb
PVC38-12ANA	0.375" (3/8")	0.500" (1/2")	100'	0.062"	45 psi	4.65 lb
PVC38-916ANA		0.563" (9/16")		0.094"	50 psi	7.47 lb
PVC38-58ANA*		0.625" (5/8")		0.125"	55 psi	10.65 lb
PVC716-916ANA*	0.437" (7/16")	0.563" (9/16")	100'	0.063"	35 psi	6.60 lb
PVC12-58ANA	0.500" (1/2")	0.625" (5/8")	100'	0.062"	30 psi	6.00 lb
PVC12-1116ANA*		0.688" (11/16")		0.094"	40 psi	9.50 lb
PVC12-34ANA		0.750" (3/4")		0.125"	45 psi	13.07 lb
PVC58-34ANA	0.625" (5/8")	0.750" (3/4")	100'	0.062"	30 psi	7.10 lb
PVC58-1316ANA*		0.813" (13/16")		0.094"	35 psi	12.32 lb
PVC58-78ANA		0.875" (7/8")		0.125"	40 psi	15.72 lb
PVC34-1ANA	0.750" (3/4")	1.00"	100'	0.125"	35 psi	18.37 lb
PVC34-54ANA*		1.25" (1 1/4")		0.250"	45 psi	20.00 lb
PVC78-118ANA*	0.875" (7/8")	1.125" (1 1/8")	100'	0.125"	30 psi	33.10 lb
PVC1-54ANA	1.00"	1.25" (1 1/4")	100'	0.125"	25 psi	23.99 lb
PVC1-138ANA*		1.375" (1 3/8")		0.187"	30 psi	37.00 lb
PVC54-64ANA	1.25" (1 1/4")	1.50" (1 1/2")	100'	0.125"	20 psi	29.00 lb
PVC54-1582ANA		1.625" (1 5/8")	50'	0.187"	30 psi	44.60 lb
PVC64-1782ANA	1.50" (1 1/2")	1.875" (1 7/8")	50'	0.187"	30 psi	52.70 lb
PVC2-2.52ANA**	2.00"	2.50" (2 1/2")	50'	0.250"	20 psi	30.00 lb

Note: * Indicates Non-Stock Packaged Length ** Indicates Non-Stock/Not NSF Certified

Note: See Back Cover or Website for Chemical Compatibility

Reinforced PVC NSF 61® Hose

DURA-PURE®
NSF 61® PVC

Dura-Pure® Reinforced PVC Hose features a polyester spiral yarn enabling higher pressure applications of both fluid and compressed gases. Dura-Pure® Hose meets FDA requirements and is NSF 61® certified, making it ideal for use with food and beverage applications.

- Certified for Direct Contact with Potable Water, Food & Beverage
- Lightweight and Flexible
- Phthalate-Free
- Flexible

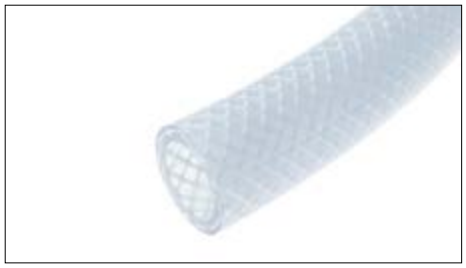

PVCBH 14 - 438 A NA

Material	
PVCBH	NSF 61® Reinforced PVC

Inside Diameter x Outside Diameter	
PVCBH316-375	3/16" x 3/8"
PVCBH14-438	1/4" x .438"
PVCBH516-531	5/16" x .531"
PVCBH38-594	3/8" x .594"
PVCBH12-34	1/2" x 3/4"
PVCBH58-891	5/8" x .891"
PVCBH34-103	3/4" x 1.03"
PVCBH1-1.3	1" x 1.3"
PVCBH54-1.62	1 1/4" x 1.62"
PVCBH64-1.938	1 X 1.938"
PVCBH2-2.492	2" x 2.492"

Package Lengths	
A	100'
A2	200'
A3	300'

Color Code	
NA	Clear

Specifications	
Temperature Range	15°F to 150°F
Vacuum Rating	28" HG
Tolerance (3/16" to 1/2")	+.004"/.008"
Tolerance (5/8" to 1")	+.008/-.012"
Tolerance (1.25" to 1.5")	+.012"/-.016"
Tolerance (2" +)	+.016"/-.020"
Hardness	Shore 73A
Safety Factor	3:1
Material	PVC (Polyvinylchloride)
Pressure Range	See Charts
Media	Gases & Liquids
Tariff Code	3917.32.0000

Certifications/Compliance
FDA Compliant
NSF 61®
REACH Compliant
RoHS Compliant
USP Class VI
ASTMF930-03
EN-71
PAHS

Fitting Compatibility
Fluid Couplers & Plugs
Hose-Barb (Page 251)

Note: See Back Cover or Website for Chemical Compatibility

DURA-PURE®
NSF 61® PVC

Fractional Sizes

Part Number	ID	OD	Length	Wall Thickness	Working Pressure at 75°F	Package Weight
PVCBH316-375ANA	0.187" (3/16")	0.375" (3/8")	100'	0.094"	250 psi	4.41 lb
PVCBH316-375A3NA			300'			13.23 lb
PVCBH14-438ANA	0.250" (1/4")	0.438"	100'	0.094"	250 psi	5.84 lb
PVCBH14-438A3NA			300'			17.52 lb
PVCBH516-531ANA	0.313" (5/16")	0.531"	100'	0.109"	250 psi	7.39 lb
PVCBH516-531A3NA			300'			22.17 lb
PVCBH38-594ANA	0.375" (3/8")	0.594"	100'	0.109"	225 psi	9.02 lb
PVCBH38-594A3NA			300'			27.06 lb
PVCBH12-34ANA	0.500" (1/2")	0.750" (3/4")	100'	0.125"	200 psi	13.33 lb
PVCBH12-34A3NA			300'			39.99 lb
PVCBH58-891ANA	0.625" (5/8")	0.891"	100'	0.133"	200 psi	15.93 lb
PVCBH58-891A3NA			300'			47.79 lb
PVCBH34-103ANA	0.750" (3/4")	1.03"	100'	0.140"	150 psi	20.72 lb
PVCBH34-103A3NA			300'			62.16 lb
PVCBH1-1.3ANA	1.00"	1.30"	100'	0.150"	125 psi	29.08 lb
PVCBH1-1.3A2NA			200'			58.16 lb
PVCBH54-1.62ANA	1.25" (1 1/4")	1.62"	100'	0.185"	100 psi	45.50 lb
PVCBH64-1.938ANA	1.50" (1 1/2")	1.93"	100'	0.215"	100 psi	63.49 lb
PVCBH2-2.492ANA**	2.00"	2.49"	50'	0.245"	75 psi	92.59 lb

Note: * Indicates Non-Stock Packaged Length ** Indicates Non-Stock/Not NSF Certified

Note: See Back Cover or Website for Chemical Compatibility

Reinforced Polyurethane Air Hose

ARMOR-AIR

Rugged and durable, Armor-Air™ is constructed of reinforced polyurethane, and is perfect for the most demanding environments.

- Excellent Flexibility
- Supplied with Reusable Fittings
- Nickel-Plated Fittings Resist Tarnishing and Corrosion
- Bend Restrictors Prevent Kinking
- Available with Fittings or in Bulk
- Lightweight

PBH 14 - 25 CB 2

Material	
PBH	Reinforced PU

Inside Diameter x Outside Diameter	
14	1/4" x 3/8"
38	3/8" x 9/16"
12	1/2" x 3/4"

Package Lengths	
25	25'
50	50'
100	100'
250	250'
500	500'

Color Code	
CB	Clear Blue

Fitting Option	
2	1/4" Male NPT Swivel
3	3/8" Male NPT Swivel
4	1/2" Male NPT Swivel
(Blank)	No Fittings
Q	Premium Series (Auto)
E	Economy Series (Manual)
DF	Safety-Slide™
BC	Safety-Touch™

Specifications	
Temperature Range	-40°F to 155°F
Max. Working Pressure	210 psi
Hardness	Shore 85A
Safety Factor	3:1
Material	Reinforced PU (Polyurethane)
Media	Air or Water
Tariff Code w/ Fittings	3917.33.0000
Tariff Code w/o Fittings	3917.32.0000

Fitting Compatibility
H-Style Compression Replacement Fitting (Page 220)

Fractional Sizes (NPT and Bulk)

Part Number	ID	OD	Length	Bend Radius	Fittings	Package Weight
PHB14-25CB2	0.250" (1/4")	0.375" (3/8")	25'	1.000"	1/4" Male NPT Swivel	1.05 lb
PBH14-50CB2			50'			2.09 lb
PBH14-100CB2			100'			4.19 lb
PBH14ACB			100'		No Fittings	3.42 lb
PBH14BCB			250'			6.84 lb
PBH14CCB			500'			13.69 lb
PBH38-25CB2	0.375" (3/8")	0.562" (9/16")	25'	1.625"	1/4" Male NPT Swivel	1.41 lb
PBH38-50CB2			50'			2.81 lb
PHB38-100CB2			100'			5.63 lb
PBH38-25CB3			25'		3/8" Male NPT Swivel	1.41 lb
PBH38-50CB3			50'			2.81 lb
PHB38-100CB3			100'			5.63 lb
PBH38ACB			100'		No Fittings	5.88 lb
PBH38BCB			250'			11.75 lb
PBH38CCB			500'			23.50 lb
PBH12-25CB4	0.500" (1/2")	0.750" (3/4")	25'	2.640"	1/2" Male NPT Swivel	2.36 lb
PBH12-50CB4			50'			4.72 lb
PBH12-100CB4			100'			9.44 lb
PBH12ACB			100'		No Fittings	7.72 lb
PBH12BCB			250'			5.44 lb
PBH12CCB			500'			30.88 lb

Fractional Sizes with Pneumatic Quick Disconnect Fittings

Part Number	ID	OD	Length	Bend Radius	Body Size	Interchange	Available QD Style
PPBH14-25CB_	0.250" (1/4")	0.375" (3/8")	25'	1.000"	1/4"	Industrial (US)	Premium Series (Auto), Economy Series (Manual), Safety-Slide™, Safety-Touch™
PBH14-50CB_			50'				
PBH14-100CB_			100'				
PBH38-25CB_	0.375" (3/8)	0.562" (9/16")	25'	1.625"	1/4" or 3/8"	Industrial (US)	Premium Series (Auto), Economy Series (Manual), Safety-Slide™, Safety-Touch™
PBH38-50CB_			50'				
PBH38-100CB_			100'				
PBH12-25CBDF	0.500" (1/2)	0.750" (3/4)	25'	2.640"	1/2"	Industrial (US)	Safety-Slide™
PBH12-50CBDF			50'				
PBH12-100CBDF			100'				

Available QD Suffix Codes		
Suffix	**Series**	**Catalog Page**
Q	Premium Series (Auto)	226
E	Economy Series (Manual)	235
DF	Safety-Slide™	238
BC	Safety-Touch™	241

Note: for 1/4" Body Size on a 3/8"ID hose, add "2" at the end. Example: DF2

Premium

Economy

Safety-Slide™

Safety-Touch™

Soft Polyurethane 60A Reinforced Air Hose

ATP's Soft-PU Hose features a 60A Durometer Reinforced Construction provides amazing flexibility and increased operator comfort.

- Ergonomic Solution for Assembly Environments
- Extreme Flexibility
- Supplied with Reusable Fittings
- Nickel-Plated Fittings Resist Tarnishing and Corrosion
- Bend Restrictors Prevent Kinking
- Available with Fittings or in Bulk

Specifications	
Temperature Range	23°F to 140°F
Max. Working Pressure	120 psi
Hardness	Shore 60A
Safety Factor	3:1
Material	Reinforced PU (Polyurethane)
Media	Air or Water
Tariff Code w/ Fittings	3917.33.0000
Tariff Code w/o Fittings	3917.32.0000

Fitting Compatibility
SH-Style Compression Replacement Fitting(page 221)

SH 6.5 - 25 LG 2

Material	
SH	Soft-PU

Inside Diameter	
6.5	1/4"
8	5/16"
11	7/16"
1/2	1/2"

Package Lengths	
25	25'
50	50'
100	100'
A	25m
B	50m
C	100m

Color Code	
LG	Light Green
NB	Navy Blue
OR	Orange
GY	Gray

Fitting Option	
2	1/4" Male NPT Swivel
3	3/8" Male NPT Swivel
(Blank)	No Fittings

Fractional Sizes

Part Number (Add Color)	I.D. (Nominal)	Length	Bend Radius	Fittings	Available Colors	Package Weight
SH6.5-25_2	1/4"	25'	1.57"	1/4" Male NPT Swivel	OR LG	1.05 lb
SH6.5-50_2		50'				2.09 lb
SH6.5-100_2		100'				4.19 lb
SH6.5A_		25m		No Fittings		1.41 lb
SH6.5B_		50m				2.81 lb
SH6.5C_		100m				5.63 lb
SH8-25_2	5/16"	25'	2.00"	1/4" Male NPT Rigid	GY OR LG	2.36 lb
SH8-50_2		50'				4.72 lb
SH8-100_2		100'				9.44 lb
SH8A_		25m		No Fittings		3.42 lb
SH8B_		50m				6.84 lb
SH8C_		100m				13.69 lb
SH11-25-3	7/16"	25'	2.56"	3/8" Male NPT Rigid	GY NB LG	5.88 lb
SH11-50-3		50'				11.75 lb
SH11-100-3		100'				23.50 lb
SH11A_		25m		No Fittings		7.72 lb
SH11B_		50m				15.44 lb
SH11C_		100m				30.88 lb

Reinforced Hybrid PVC Air Hose

STRIPER™ REINFORCED PVC

Striper™ Reinforced Hybrid PVC Air Hose is a lightweight, flexible, abrasion-resistant hybrid PVC air hose intended for the toughest of work environments.

- Smooth, Transparent Outer Layer, Allowing for Easy Cleaning and Inspection
- Nickel-Plated, Field-Repairable Fittings with Bend-Restrictors
- Cold Weather Flexibility Down to -40°F
- Will not Kink or Create Loops while Laying on Ground
- Available in Assemblies or Bulk

STH 14 - 25 BKR 2

Material	
STH	Hybird PVC

Inside Diameter x Outside Diameter	
14	1/4" x 7/16"
38	3/8" x 9/16"
12	1/2" x 3/4"

Package Lengths	
10	10'
15	15'
25	25'
50	50'
100	100'
A	100' (bulk)
B	250' (bulk)
C	500' (bulk)

Color Code	
BKR	Black & Red

Fitting Option	
2	1/4" Male NPT Rigid
3	3/8" Male NPT Rigid
4	1/2" Male NPT Rigid
(Blank)	No Fittings
Q	Premium Series (Auto)
E	Economy Series (Manual)
DF	Safety-Slide™
BC	Safety-Touch™

Specifications	
Temperature Range	-40°F to 180°F
Max. Working Pressure	300 psi
Construction	Reinforced Hybrid PVC
Hardness	Shore 62A
Media	Air or Water
Tariff Code (w/ Fittings)	3917.33.0000
Tariff Code (w/o Fittings)	3917.32.0000

Fitting Compatibility
STH-Style Compression Replacement Fitting (Page 221)

Fractional Sizes (NPT and Bulk)

Part Number	ID	OD	Length	Bend Radius	Fittings	Package Weight
STH14-10BKR2	0.250" (1/4")	0.437" (7/16")	10'	1.00"	1/4" Male NPT Rigid	0.58 lb
STH14-15BKR2			15'			0.87 lb
STH14-25BKR2			25'			1.46 lb
STH14-50BKR2			50'			2.92 lb
STH14-100BKR2			100'			5.84 lb
STH14-ABKR			100'		No Fittings	5.84 lb
STH14-BBKR			250'			14.60 lb
STH14-CBKR			500'			29.20 lb
STH38-10BKR2	0.375" (3/8")	0.562" (9/16")	10'	1.62"	1/4" Male NPT Rigid	0.90 lb
STH38-15BKR2			15'			1.35 lb
STH38-25BKR2			25'			2.26 lb
STH38-50BKR2			50'			4.51 lb
STH38-100BKR2			100'			9.02 lb
STH38-25BKR3			25'		3/8" Male NPT Rigid	2.26 lb
STH38-50BKR3			50'			4.51 lb
STH38-100BKR3			100'			9.02 lb
STH38-ABKR			100'		No Fittings	9.02 lb
STH38-BBKR			250'			22.55 lb
STH38-CBKR			500'			45.10 lb
STH12-10BKR4	0.500" (1/2")	0.750" (3/4")	10'	2.64"	1/2" Male NPT Rigid	1.13 lb
STH12-15BKR4			15'			1.99 lb
STH12-25BKR4			25'			3.33 lb
STH12-50BKR4			50'			6.67 lb
STH12-100BKR4			100'			13.33 lb
STH12-ABKR			100'		No Fittings	13.33 lb
STH12-BBKR			250'			33.33 lb
STH12-CBKR			500'			66.65 lb

Fractional Sizes with Pneumatic Quick Disconnect Fittings

Part Number	ID	OD	Length	Bend Radius	Body Size	Interchange	Available QD Style
STH14-25BKR_	0.250" (1/4")	0.437" (7/16")	25'	1.000"	1/4"	Industrial (US)	Premium Series (Auto) Economy Series (Manual) Safety-Slide™ Safety-Touch™
STH14-50BKR_			50'				
STH14-100BKR_			100'				
STH38-25BKR_	0.375" (3/8")	0.562" (9/16")	25'	1.625"	1/4" or 3/8"	Industrial (US)	Premium Series (Auto) Economy Series (Manual) Safety-Slide™ Safety-Touch™
STH38-50BKR_			50'				
STH38-50BKR_			100'				
STH12-25BKR_	0.500" (1/2")	0.750" (3/4")	25'	2.640"	1/2"	Industrial (US)	Safety-Slide™
STH12-50BKR_			50'				
STH12-100BKR_			100'				

Available QD Suffix Codes		
Suffix	**Series**	**Catalog Page**
Q	**Premium Series (Auto)**	**226**
E	**Economy Series (Manual)**	**235**
DF	**Safety-Slide™**	**238**
BC	**Safety-Touch™**	**241**

Note: for 1/4" Body Size on a 3/8"ID hose, add "2" at the end. Example: DF2

Premium

Economy

Safety-Slide™

Safety-Touch™

Bonded Tubing & Spirals

TECHNIBOND®
with Surethane™

General Bonded Tubing Information

Advanced Technology Products manufactures Technibond® bonded tubing from Surethane™ 98A Polyurethane. All Technibond® tubing can be separated in three easy steps.

Step 1:

Using a scissor or tubing cutter, make a small cut on a bonded section of tubing. Make a note of how far back this initial cut is.

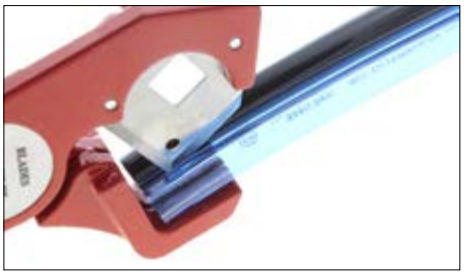

Step 2:

Pull bonded tubing sections apart enough to allow desired connections to be made.

Step 3:

Trim initial split section from bonded tubing section.

NSF

MADE IN USA

TECHNIBOND® with Surethane™

Bonded NSF 51® Polyurethane Tubing

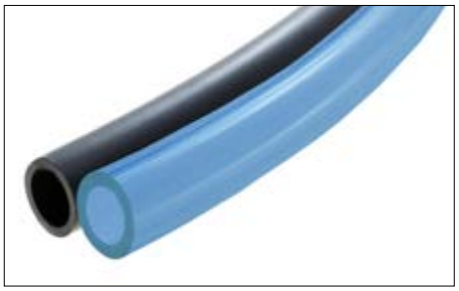

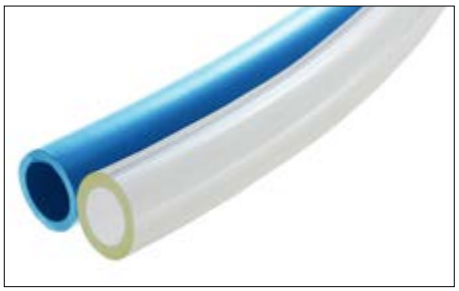

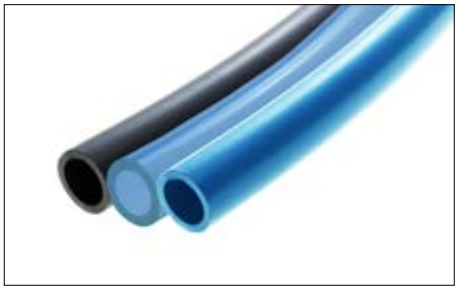

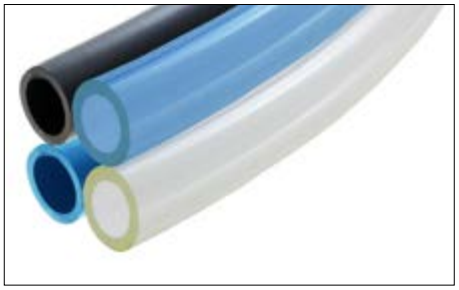

ATP's Technibond® series utilizes NSF 51® Certified Surethane™ 98A Polyurethane tubing to create multiple-bore bonded tubing.

- Time-Saving Measure for OEM Applications
- Resistant to Hydrolysis and Oil
- Kink and Abrasion Resistant

2 MP - 532 - A - 01

Number of Tubes	
2	2 Bore
3	3 Bore
4	4 Bore

Model	
MP	Bonded 98A PU

Tube OD	
532	5/32"
14	1/4"
38	3/8"
12	1/2"
04M	4mm
06M	6mm
08M	8mm
10M	10mm
12M	12mm

Length (Fractional)	
A	25 ft
B	50 ft
C	100 ft
D	250 ft
E	500 ft
F	1,000 ft
Length (Metric)	
50	50 ft
A	10m
B	20m
C	50m
D	100m
E	200m
F	300m

Color (2 Bore Only)	
01	Black/Clear Blue
02	Light Blue/Clear

Specifications	
Temperature Range	-40°F to 160°F*
Vacuum Rating	28" HG
Tolerance (1/8" to 1/2")	+/- .005"
Tolerance (9/16" to 3/4")	+/- .006"
Hardness	Shore 98A
Safety Factor	3:1
Material	PU (Polyurethane)
Pressure Range	See Charts
Media	Gases & Liquids
Tariff Code	3917.32.0000

Certifications/Compliance
ROHS Compliant
UL94HB Compliant
NSF 51® Certified
Meets NSF 61® Requirements

Fitting Compatibility
Technifit™ Push to Connect (Page 52 - 173)
Compression
Hose-Barb (Page 251)

NSF

MADE IN USA

TECHNIBOND® with Surethane™

Technibond® 2 Bore Fractional Sizes

Model	OD	ID	Length	Wall Thickness	Bend Radius	Working Pressure @ 75°F	Colors	Stock	Package Weight
2MP-532-A-01	0.156" (5/32")	0.093" (3/32")	25'	0.031"	0.200"	240 psi	Black, Clear Blue	×	0.34 lb
2MP-532-B-01			50'					LQ	0.70 lb
2MP-532-C-01			100'					LQ	1.40 lb
2MP-532-D-01			250'					×	3.50 lb
2MP-532-E-01			500'					×	7.00 lb
2MP-532-F-01			1,000'					×	14.00 lb
2MP-532-A-02			25'				Light Blue, Clear	LQ	0.34 lb
2MP-532-B-02			50'					×	0.70 lb
2MP-532-C-02			100'					LQ	1.40 lb
2MP-532-D-02			250'					×	3.50 lb
2MP-532-E-02			500'					×	7.00 lb
2MP-532-F-02			1,000'					×	14.00 lb
2MP-14-A-01	0.250" (1/4")	0.156" (5/32)	25'	0.047"	0.476"	180 psi	Black, Clear Blue	×	0.75 lb
2MP-14-B-01			50'					✓	1.55 lb
2MP-14-C-01			100'					✓	3.10 lb
2MP-14-D-01			250'					LQ	7.50 lb
2MP-14-E-01			500'					LQ	N/A
2MP-14-F-01			1,000'					LQ	N/A
2MP-14-A-02			25'				Light Blue, Clear	×	0.75 lb
2MP-14-B-02			50'					×	1.55 lb
2MP-14-C-02			100'					LQ	3.10 lb
2MP-14-D-02			250'					×	7.50 lb
2MP-14-E-02			500'					×	N/A
2MP-14-F-02			1,000'					×	N/A
2MP-38-A-01	0.375" (3/8")	0.250" (1/4")	25'	0.063"	1.000"	150 psi	Black, Clear Blue	×	1.70 lb
2MP-38-B-01			50'					LQ	3.40 lb
2MP-38-C-01			100'					LQ	6.80 lb
2MP-38-D-01			250'					LQ	17.00 lb
2MP-38-A-02			25'				Light Blue, Clear	LQ	1.70 lb
2MP-38-B-02			50'					×	3.40 lb
2MP-38-C-02			100'					×	6.80 lb
2MP-38-D-02			250'					×	17.00 lb
2MP-12-A-01	0.500" (1/2")	0.328" (21/64)	25'	0.086"	1.102"	150 psi	Black, Clear Blue	×	2.55 lb
2MP-12-B-01			50'					LQ	5.10 lb
2MP-12-C-01			100'					×	10.20 lb
2MP-12-A-02			25'				Light Blue, Clear	×	2.55 lb
2MP-12-B-02			50'					×	5.10 lb
2MP-12-C-02			100'					×	10.20 lb

✓: Stocked Assembly, **LQ** Limited Quantities Available, ×: Non-Stock (Contact ATP)

MADE IN USA

NSF

Bonded Tubing

TECHNIBOND®
with Surethane™

Technibond® 2 Bore Metric Sizes

Model	OD	ID	Length	Wall Thickness	Bend Radius	Working Pressure @ 75°F	Colors	Stock	Package Weight
2MP-04M-50-01	4mm	2.4mm	50'	0.78mm	6.35mm	200 psi (13,7 Bar)	Black, Clear Blue	✓	0.70 lb
2MP-04M-A-01			10m					×	0.46 lb
2MP-04M-B-01			20m					LQ	0.92 lb
2MP-04M-C-01			50m					×	2.30 lb
2MP-04M-D-01			100m					LQ	4.60 lb
2MP-04M-E-01			200m					×	9.20 lb
2MP-04M-F-01			300m					×	13.80 lb
2MP-04M-50-02			50'				Light Blue, Clear	×	0.70 lb
2MP-04M-A-02			10m					×	0.46 lb
2MP-04M-B-02			20m					×	0.92 lb
2MP-04M-C-02			50m					×	2.30 lb
2MP-04M-D-02			100m					×	4.60 lb
2MP-04M-E-02			200m					×	9.20 lb
2MP-04M-F-02			300m					×	13.80 lb
2MP-06M-50-01	6mm	4mm	50'	1.00mm	12.00mm	180 psi (12,4 Bar)	Black, Clear Blue	✓	1.30 lb
2MP-06M-A-01			10m					×	0.85 lb
2MP-06M-B-01			20m					LQ	1.71 lb
2MP-06M-C-01			50m					LQ	4.28 lb
2MP-06M-D-01			100m					LQ	8.56 lb
2MP-06M-E-01			200m					LQ	17.12 lb
2MP-06M-F-01			300m					×	25.68 lb
2MP-06M-50-02			50'				Light Blue, Clear	×	1.30 lb
2MP-06M-A-02			10m					×	0.85 lb
2MP-06M-B-02			20m					×	1.71 lb
2MP-06M-C-02			50m					×	4.28 lb
2MP-06M-D-02			100m					LQ	8.56 lb
2MP-06M-E-02			200m					×	17.12 lb
2MP-06M-F-02			300m					×	25.68 lb

✓: Stocked Assembly, **LQ** Limited Quantities Available, ×: Non-Stock (Contact ATP)

Note: See Back Cover or Website for Chemical Compatibility

MADE IN USA

NSF

TECHNIBOND® with Surethane™

Technibond® 2 Bore Metric Sizes (continued)

Model	OD	ID	Length	Wall Thickness	Bend Radius	Working Pressure @ 75°F	Colors	Stock	Package Weight
2MP-08M-50-01	8mm	4.7mm	50'	1.60mm	15mm	175 psi (12 Bar)	Black, Clear Blue	✓	2.60 lb
2MP-08M-A-01			10m					×	1.71 lb
2MP-08M-B-01			20m					×	3.41 lb
2MP-08M-C-01			50m					×	8.53 lb
2MP-08M-D-01			100m					×	17.06 lb
2MP-08M-E-01			200m					×	34.12 lb
2MP-08M-F-01			300m					×	51.18 lb
2MP-08M-50-02			50'				Light Blue, Clear	×	2.60 lb
2MP-08M-A-02			10m					×	1.71 lb
2MP-08M-B-02			20m					×	3.41 lb
2MP-08M-C-02			50m					×	8.53 lb
2MP-08M-D-02			100m					LQ	17.06 lb
2MP-08M-E-02			200m					×	34.12 lb
2MP-08M-F-02			300m					×	51.18 lb
2MP-10M-50-01	10mm	6.5mm	50'	1.75mm	25mm	150 psi (10,3 Bar)	Black, Clear Blue	LQ	3.90 lb
2MP-10M-A-01			10m					×	2.56 lb
2MP-10M-B-01			20m					×	5.12 lb
2MP-10M-C-01			50m					×	12.80 lb
2MP-10M-D-01			100m					×	25.60 lb
2MP-10M-50-02			50'				Light Blue, Clear	×	3.90 lb
2MP-10M-A-02			10m					×	2.56 lb
2MP-10M-B-02			20m					×	5.12 lb
2MP-10M-C-02			50m					×	12.80 lb
2MP-10M-D-02			100m					×	25.60 lb
2MP-12M-50-01	12mm	8mm	50'	2.00mm	28mm	150 psi (10,3 Bar)	Black, Clear Blue	LQ	5.30 lb
2MP-12M-A-01			10m					×	3.48 lb
2MP-12M-B-01			20m					×	6.96 lb
2MP-12M-C-01			50m					×	17.40 lb
2MP-12M-D-01			100m					×	N/A
2MP-12M-50-02			50'				Light Blue, Clear	×	5.30 lb
2MP-12M-A-02			10m					×	3.48 lb
2MP-12M-B-02			20m					×	6.96 lb
2MP-12M-C-02			50m					×	17.40 lb
2MP-12M-D-02			100m					×	N/A

✓: Stocked Assembly, **LQ** Limited Quantities Available, ×: Non-Stock (Contact ATP)

Note: See Back Cover or Website for Chemical Compatibility

NSF

MADE IN USA

Bonded Tubing

TECHNIBOND®
with Surethane™

Technibond® 3 Bore Fractional & Metric Sizes

Model	OD	ID	Length	Wall Thickness	Bend Radius	Working Pressure @ 75°F	Colors	Stock	Package Weight
3MP-532-A	0.156" (5/32")	0.093" (3/32")	25'	0.031"	0.20"	240 psi	Black, Clear Blue, Light Blue	×	0.53 lb
3MP-532-B			50'					×	0.95 lb
3MP-532-C			100'					×	2.10 lb
3MP-532-D			250'					×	5.25 lb
3MP-532-E			500'					×	10.50 lb
3MP-14-A	0.250" (1/4")	0.156" (5/32")	25'	0.047"	0.47"	180 psi	Black, Clear Blue, Light Blue	×	1.13 lb
3MP-14-B			50'					×	2.24 lb
3MP-14-C			100'					×	4.50 lb
3MP-14-D			250'					×	11.25 lb
3MP-14-E			500'					×	22.50 lb
3MP-38-A	0.375" (3/8")	0.250" (1/4")	25'	0.063"	1.00"	150 psi	Black, Clear Blue, Light Blue	×	2.55 lb
3MP-38-B			50'					×	6.72 lb
3MP-38-C			100'					×	10.20 lb
3MP-12-A	0.500" (1/2")	0.328" (21/64")	25'	0.086"	1.10"	150 psi	Black, Clear Blue, Light Blue	×	3.83 lb
3MP-12-B			50'					×	8.03 lb
3MP-12-C			100'					×	15.30 lb
3MP-04M-50	4mm	2.4mm	50'	0.78mm	6.35mm	200 psi (13,7 Bar)	Black, Clear Blue, Light Blue	×	1.05 lb
3MP-04M-A			10m					×	0.69 lb
3MP-04M-B			20m					×	1.38 lb
3MP-04M-C			50m					×	3.45 lb
3MP-04M-D			100m					×	6.90 lb
3MP-04M-E			200m					×	13.80 lb
3MP-06M-50	6mm	4mm	50'	1.00mm	12.00mm	180 psi (12,4 Bar)	Black, Clear Blue, Light Blue	×	1.95 lb
3MP-06M-A			10m					×	1.28 lb
3MP-06M-B			20m					×	2.56 lb
3MP-06M-C			50m					×	6.40 lb
3MP-06M-D			100m					×	2.80 lb
2MP-06M-E			200m					×	25.60 lb
3MP-08M-50	8mm	4.7mm	50'	1.60mm	15.00mm	175 psi (12 Bar)	Black, Clear Blue, Light Blue	×	3.90 lb
3MP-08M-A			10m					×	2.56 lb
3MP-08M-B			20m					×	5.12 lb
3MP-08M-C			50m					×	12.80 lb
3MP-08M-D			100m					×	25.60 lb
3MP-08M-E			200m					×	51.20 lb
3MP-10M-50	10mm	6.5mm	50'	1.75mm	25.00mm	150 psi (10,3 Bar)	Black, Clear Blue, Light Blue	×	5.85 lb
3MP-10M-A			10m					×	3.84 lb
3MP-10M-B			20m					×	7.68 lb
3MP-12M-50	12mm	8mm	50'	2.00mm	28.00mm	150 psi (10,3 Bar)	Black, Clear Blue, Light Blue	×	7.95 lb
3MP-12M-A			10m					×	5.22 lb
3MP-12M-B			20m					×	10.44 lb

✓: Stocked Assembly, **LQ** Limited Quantities Available, ×: Non-Stock (Contact ATP)

NSF

Note: See Back Cover or Website for Chemical Compatibility

TECHNIBOND® with Surethane™

Technibond® 4 Bore Fractional Sizes & Metric Sizes

Model	OD	ID	Length	Wall Thickness	Bend Radius	Working Pressure @ 75°F	Colors	Stock	Package Weight
4MP-532-A	0.156" (5/32")	0.093" (3/32")	25'	0.031"	0.25"	200 psi	Black, Clear Blue, Light Blue, Clear	×	0.70 lb
4MP-532-B			50'					×	1.40 lb
4MP-532-C			100'					×	2.80 lb
4MP-532-D			250'					×	7.00 lb
4MP-532-E			500'					×	14.00 lb
4MP-14-A	0.250" (1/4")	0.156" (5/32")	25'	0.047"	0.47"	180 psi	Black, Clear Blue, Light Blue, Clear	×	1.50 lb
4MP-14-B			50'					×	2.93 lb
4MP-14-C			100'					×	6.00 lb
4MP-38-A	0.375" (3/8")	0.250" (1/4")	25'	0.063"	1.00"	150 psi	Black, Clear Blue, Light Blue, Clear	×	3.40 lb
4MP-38-B			50'					×	6.56 lb
4MP-38-C			100'					×	13.60 lb
4MP-12-A	0.500" (1/2")	0.328" (21/64")	25'	0.086"	1.10"	150 psi	Black, Clear Blue, Light Blue, Clear	×	5.10 lb
4MP-12-B			50'					×	10.20 lb
4MP-04M-50	4mm	2.4mm	50'	0.78mm	6.35mm	200 psi (13,7 Bar)	Black, Clear Blue, Light Blue, Clear	×	1.40 lb
4MP-04M-A			10m					×	0.92 lb
4MP-04M-B			20m					×	1.84 lb
4MP-04M-C			50m					×	4.60 lb
4MP-04M-D			100m					×	9.20 lb
4MP-04M-E			200m					×	18.40 lb
4MP-06M-50	6mm	4mm	50'	1.00mm	12.00mm	180 psi (12,4 Bar)	Black, Clear Blue, Light Blue, Clear	×	2.60 lb
4MP-06M-A			10m					×	1.71 lb
4MP-06M-B			20m					×	3.42 lb
4MP-06M-C			50m					×	8.55 lb
4MP-08M-50	8mm	5mm	50'	1.60mm	15.00mm	175 psi (12 Bar)	Black, Clear Blue, Light Blue, Clear	×	5.20 lb
4MP-08M-A			10m					×	3.41 lb
4MP-08M-B			20m					×	6.82 lb
4MP-08M-C			50m					×	17.05 lb
4MP-10M-50	10mm	6.5mm	50'	1.75mm	25.00mm	150 psi (10,3 Bar)	Black, Clear Blue, Light Blue, Clear	×	7.80 lb
4MP-10M-A			10m					×	5.12 lb
4MP-10M-B			20m					×	10.24 lb
4MP-12M-50	12mm	8mm	50'	2.00mm	28.00mm	150 psi (10,3 Bar)	Black, Clear Blue, Light Blue, Clear	×	10.60 lb
4MP-12M-A			10m					×	6.96 lb
4MP-12M-B			20m					×	13.92 lb

✓: Stocked Assembly, LQ Limited Quantities Available, ×: Non-Stock (Contact ATP)

Note: See Back Cover or Website for Chemical Compatibility

NSF

MADE IN USA

TECHNIBOND® with Surethane™

Bonded NSF 51® Polyurethane Spirals

2 Bore (Black/Clear Blue)

3 Bore

4 Bore

Note: See Back Cover or Website for Chemical Compatibility

ATP's Technibond® series utilizes NSF 51® Certified Surethane™ 98A Polyurethane tubing to create multiple-bore bonded spirals.

- Time-Saving Measure for OEM Applications
- Resistant to Hydrolysis and Oil
- Kink and Abrasion Resistant

All Technibond™ Spirals are offered in **number of turns** which provide varying working lengths for each diameter.

See supplied charts for working length.

2 MPS - 532 - 05 - 01

Number of Tubes	
2	2 Bore
3	3 Bore
4	4 Bore

Model	
MPS	Bonded 98A PU Spiral

Tube OD	
532	5/32"
14	1/4"
38	3/8"
12	1/2"
04M	4mm
06M	6mm
08M	8mm
10M	10mm
12M	12mm

Number of Turns	
05	5
10	10
15	15
20	20
30	30
40	40

Color (2 Bore Only)	
01	Black/Clear Blue
02	Light Blue/Clear

Specifications	
Temperature Range	-40°F to 160°F*
Vacuum Rating	28" HG
Tolerance (1/8" to 1/2")	+/- .005"
Tolerance (9/16" to ¾")	+/- .006"
Hardness	Shore 98A
Safety Factor	3:1
Material	PU (Polyurethane)
Pressure Range	See Charts
Media	Gases & Liquids
Tariff Code	3917.32.0000

Certifications/Compliance
ROHS Compliant
UL94HB Compliant
NSF 51® Certified
Meets NSF 61® Requirements

Fitting Compatibility
Technifit™ Push to Connect (Page 52 - 173)
Compression
Hose-Barb (Page 251)

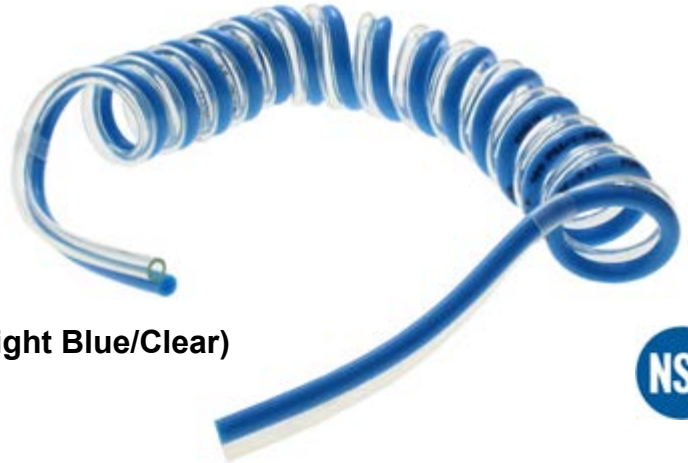

2 Bore (Light Blue/Clear)

MADE IN USA

NSF

TECHNIBOND® with Surethane™

Surethane™ Technibond® 2 Bore Spiral, Fractional Sizes

Model	OD	ID	Total Turns	Working Length	Compressed Length	Tail Length	Working Pressure @ 75°F	Spiral OD	Colors	Stock	Package Weight
2MPS-532-05-01	0.156" (5/32")	0.093" (3/32")	5	1.20'	9.50"	4" & 4"	240 psi	0.875"	Black & Clear Blue	LQ	0.03 lb
2MPS-532-10-01			10	2.00'	11.12"					LQ	0.04 lb
2MPS-532-15-01			15	2.70'	12.62"					×	0.05 lb
2MPS-532-20-01			20	3.50'	14.25"					LQ	0.65 lb
2MPS-532-30-01			30	5.40'	17.50"					LQ	0.79 lb
2MPS-532-40-01			40	6.50'	20.62"					LQ	0.10 lb
2MPS-532-05-02	0.156" (5/32")	0.093" (3/32")	5	1.20'	9.50"	4" & 4"	240 psi	0.875"	Light Blue & Clear	×	0.03 lb
2MPS-532-10-02			10	2.00'	11.12"					✓	0.04 lb
2MPS-532-15-02			15	2.70'	12.62"					×	0.05 lb
2MPS-532-20-02			20	3.50'	14.25"					✓	0.65 lb
2MPS-532-30-02			30	5.40'	17.50"					LQ	0.79 lb
2MPS-532-40-02			40	6.50'	20.62"					LQ	0.10 lb
2MPS-14-05-01	0.250" (1/4")	0.156" (5/32")	5	1.70'	10.50"	4" & 4"	180 psi	1.500"	Black & Clear Blue	✓	0.07 lb
2MPS-14-10-01			10	2.90'	13.00"					✓	0.12 lb
2MPS-14-15-01			15	4.00'	15.50"					LQ	0.17 lb
2MPS-14-20-01			20	5.30'	18.00"					LQ	0.23 lb
2MPS-14-30-01			30	7.60'	23.00"					LQ	0.32 lb
2MPS-14-40-01			40	10.00'	28.00"					✓	0.43 lb
2MPS-14-05-02	0.250" (1/4")	0.156" (5/32")	5	1.70'	10.50"	4" & 4"	180 psi	1.500"	Light Blue & Clear	×	0.07 lb
2MPS-14-10-02			10	2.90'	13.00"					×	0.12 lb
2MPS-14-15-02			15	4.00'	15.50"					×	0.17 lb
2MPS-14-20-02			20	5.30'	18.00"					LQ	0.23 lb
2MPS-14-30-02			30	7.60'	23.00"					×	0.32 lb
2MPS-14-40-02			40	10.00'	28.00"					LQ	0.43 lb
2MPS-38-05-01	0.375" (3/8")	0.250" (1/4")	5	2.00'	11.75"	4" & 4"	150 psi	2.000"	Black & Clear Blue	LQ	0.17 lb
2MPS-38-10-01			10	3.60'	15.50"					LQ	0.31 lb
2MPS-38-15-01			15	5.20'	19.25"					LQ	0.45 lb
2MPS-38-20-01			20	6.70'	23.00"					×	0.57 lb
2MPS-38-30-01			30	9.80'	30.50"					LQ	0.83 lb
2MPS-38-40-01			40	12.90'	38.00"					LQ	1.10 lb
2MPS-38-05-02	0.375" (3/8")	0.250" (1/4")	5	2.00'	11.75"	4" & 4"	150 psi	2.000"	Light Blue & Clear	×	0.17 lb
2MPS-38-10-02			10	3.60'	15.50"					×	0.31 lb
2MPS-38-15-02			15	5.20'	19.25"					×	0.45 lb
2MPS-38-20-02			20	6.70'	23.00"					LQ	0.57 lb
2MPS-38-30-02			30	9.80'	30.50"					✓	0.83 lb
2MPS-38-40-02			40	12.90'	38.00"					LQ	1.10 lb

✓: Stocked Assembly, LQ Limited Quantities Available, ×: Non-Stock (Contact ATP)

Note: See Back Cover or Website for Chemical Compatibility

NSF

MADE IN USA

Bonded Spirals

TECHNIBOND® with Surethane™

Surethane™ Technibond® 2 Bore Spiral - Fractional Sizes (continued)

Model	OD	ID	Total Turns	Working Length	Compressed Length	Tail Length	Working Pressure @ 75°F	Spiral OD	Colors	Stock	Package Weight
2MPS-12-05-01	0.500" (1/2")	0.328" (21/64")	5	2.60'	13.00"	4" & 4"	150 psi	2.625"	Black & Clear Blue	LQ	0.44 lb
2MPS-12-10- 01			10	4.70'	18.00"					×	0.79 lb
2MPS-12-15-01			15	6.70'	23.00"					×	1.12 lb
2MPS-12-20-01			20	8.77'	28.00"					LQ	1.46 lb
2MPS-12-30-01			30	12.90'	38.00"					×	2.16 lb
2MPS-12-40-01			40	17.00'	48.00"					✓	2.83 lb
2MPS-12-05-02	0.500" (1/2")	0.328" (21/64")	5	2.60'	13.00"	4" & 4"	150 psi	2.625"	Light Blue & Clear	×	0.44 lb
2MPS-12-10-02			10	4.70'	18.00"					×	0.79 lb
2MPS-12-15-02			15	6.70'	23.00"					×	1.12 lb
2MPS-12-20-02			20	8.77'	28.00"					×	1.46 lb
2MPS-12-30-02			30	12.90'	38.00"					×	2.16 lb
2MPS-12-40-02			40	17.00'	48.00"					×	2.83 lb

✓: Stocked Assembly, **LQ** Limited Quantities Available, ×: Non-Stock (Contact ATP)

Note: See Back Cover or Website for Chemical Compatibility

MADE IN USA

NSF

TECHNIBOND® with Surethane™

Technibond® 2 Bore Spiral, Metric Sizes

Model	OD	ID	Total Turns	Working Length	Compressed Length	Tail Length	Working Pressure @ 75°F	Spiral OD	Colors	Stock	Package Weight
2MPS-04M-05-01	4mm	2.4mm	5	37cm	24cm	100mm & 100mm	200 psi (13,7 Bar)	24mm	Black & Clear Blue	LQ	0.02 lb
2MPS-04M-10-01			10	60cm	28cm					LQ	0.03 lb
2MPS-04M-15-01			15	82cm	32cm					✓	0.04 lb
2MPS-04M-20-01			20	105cm	36cm					✓	0.05 lb
2MPS-04M-30-01			30	151cm	44cm					LQ	0.07 lb
2MPS-04M-40-01			40	197cm	52cm					✓	0.12 lb
2MPS-04M-05-02	4mm	2.4mm	5	37cm	24cm	100mm & 100mm	200 psi (13,7 Bar)	24mm	Light Blue & Clear	×	0.02 lb
2MPS-04M-10-02			10	60cm	28cm					×	0.03 lb
2MPS-04M-15-02			15	82cm	32cm					×	0.04 lb
2MPS-04M-20-02			20	105cm	36cm					×	0.05 lb
2MPS-04M-30-02			30	151cm	44cm					×	0.07 lb
2MPS-04M-40-02			40	197cm	52cm					×	0.12 lb
2MPS-06M-05-01	6mm	4mm	5	51cm	26cm	100mm & 100mm	180 psi (12,4 Bar)	37mm	Black & Clear Blue	LQ	0.07 lb
2MPS-06M-10-01			10	86cm	32cm					LQ	0.10 lb
2MPS-06M-15-01			15	123cm	38cm					LQ	0.17 lb
2MPS-06M-20-01			20	160cm	44cm					×	0.20 lb
2MPS-06M-30-01			30	230cm	56cm					✓	0.32 lb
2MPS-06M-40-01			40	302cm	68cm					LQ	0.37 lb
2MPS-06M-05-02	6mm	4mm	5	51cm	26cm	100mm & 100mm	180 psi (12,4 Bar)	37mm	Light Blue & Clear	×	0.07 lb
2MPS-06M-10-02			10	86cm	32cm					×	0.10 lb
2MPS-06M-15-02			15	123cm	38cm					×	0.17 lb
2MPS-06M-20-02			20	160cm	44cm					✓	0.20 lb
2MPS-06M-30-02			30	230cm	56cm					LQ	0.32 lb
2MPS-06M-40-02			40	302cm	68cm					✓	0.37 lb
2MPS-08M-05-01	8mm	4.7mm	5	53cm	28cm	100mm & 100mm	175 psi (12 Bar)	41mm	Black & Clear Blue	LQ	0.13 lb
2MPS-08M-10-01			10	91cm	36cm					×	0.20 lb
2MPS-08M-15-01			15	130cm	44cm					LQ	0.29 lb
2MPS-08M-20-01			20	168cm	52cm					LQ	0.38 lb
2MPS-08M-30-01			30	243cm	68cm					×	0.54 lb
2MPS-08M-40-01			40	320cm	84cm					×	0.71 lb
2MPS-08M-05-02	8mm	4.7mm	5	53cm	28cm	100mm & 100mm	175 psi (12 Bar)	41mm	Light Blue & Clear	×	0.13 lb
2MPS-08M-10-02			10	91cm	36cm					×	0.20 lb
2MPS-08M-15-02			15	130cm	44cm					×	0.29 lb
2MPS-08M-20-02			20	168cm	52cm					LQ	0.38 lb
2MPS-08M-30-02			30	243cm	68cm					×	0.54 lb
2MPS-08M-40-02			40	320cm	84cm					LQ	0.71 lb

✓: Stocked Assembly, **LQ** Limited Quantities Available, ×: Non-Stock (Contact ATP)

Note: See Back Cover or Website for Chemical Compatibility

NSF

MADE IN USA

Bonded Spirals

TECHNIBOND® with Surethane™

Technibond® 2 Bore Spiral, Metric Sizes (continued)

Model	OD	ID	Total Turns	Working Length	Compressed Length	Tail Length	Working Pressure @ 75°F	Spiral OD	Colors	Stock	Package Weight
2MPS-10M-05-01	10mm	6.5mm	5	62cm	30cm	100mm & 100mm	150 psi (10,3 Bar)	52mm	Black & Clear Blue	×	0.23 lb
2MPS-10M-10-01			10	110cm	40cm					×	0.35 lb
2MPS-10M-15-01			15	160cm	50cm					×	0.48 lb
2MPS-10M-20-01			20	205cm	60cm					LQ	0.64 lb
2MPS-10M-30-01			30	301cm	80cm					×	0.95 lb
2MPS-10M-40-01			40	396cm	100cm					✓	1.20 lb
2MPS-10M-05-02	10mm	6.5mm	5	62cm	30cm	100mm & 100mm	150 psi (10,3 Bar)	52mm	Light Blue & Clear	×	0.23 lb
2MPS-10M-10-02			10	110cm	40cm					×	0.35 lb
2MPS-10M-15-02			15	160cm	50cm					×	0.48 lb
2MPS-10M-20-02			20	205cm	60cm					✓	0.64 lb
2MPS-10M-30-02			30	301cm	80cm					×	0.95 lb
2MPS-10M-40-02			40	396cm	100cm					✓	1.20 lb
2MPS-12M-05-01	12mm	8mm	5	78cm	32cm	100mm & 100mm	150 psi (10,3 Bar)	66mm	Black & Clear Blue	LQ	0.38 lb
2MPS-12M-10-01			10	138cm	44cm					×	0.62 lb
2MPS-12M-15-01			15	200cm	56cm					×	0.92 lb
2MPS-12M-20-01			20	262cm	68cm					×	1.15 lb
2MPS-12M-30-01			30	387cm	92cm					×	1.79 lb
2MPS-12M-40-01			40	512cm	116cm					×	2.24 lb
2MPS-12M-05-02	12mm	8mm	5	78cm	32cm	100mm & 100mm	150 psi (10,3 Bar)	66mm	Light Blue & Clear	×	0.38 lb
2MPS-12M-10-02			10	138cm	44cm					×	0.62 lb
2MPS-12M-15-02			15	200cm	56cm					×	0.92 lb
2MPS-12M-20-02			20	262cm	68cm					×	1.15 lb
2MPS-12M-30-02			30	387cm	92cm					×	1.79 lb
2MPS-12M-40-02			40	512cm	116cm					×	2.24 lb

✓: Stocked Assembly, **LQ** Limited Quantities Available, ×: Non-Stock (Contact ATP)

Note: See Back Cover or Website for Chemical Compatibility

MADE IN USA

NSF

TECHNIBOND® with Surethane™

Technibond® 3 Bore Spiral, Fractional Sizes

Model	OD	ID	Total Turns	Working Length	Compressed Length	Tail Length	Working Pressure @ 75°F	Spiral OD	Colors	Stock	Package Weight
3MPS-532-05	0.156" (5/32")	0.093" (3/32")	5	1.50'	10.37"	4" & 4"	240 psi	0.875"	Black, Clear Blue & Light Blue	×	0.04 lb
3MPS-532-10			10	2.50'	12.75"					×	0.06 lb
3MPS-532-15			15	3.50'	15.00"					×	0.08 lb
3MPS-532-20			20	4.40'	17.37"					×	0.10 lb
3MPS-532-30			30	6.40'	22.25"					×	0.14 lb
3MPS-532-40			40	8.30'	27.00"					×	0.23 lb
3MPS-14-05	0.250" (1/4")	0.156" (5/32")	5	2.00'	11.75"	4" & 4"	180 psi	1.500"	Black, Clear Blue & Light Blue	×	0.13 lb
3MPS-14-10			10	3.40'	15.50"					×	0.22 lb
3MPS-14-15			15	4.80'	19.25"					×	0.30 lb
3MPS-14-20			20	6.30'	23.00"					×	0.40 lb
3MPS-14-30			30	9.10'	30.50"					×	0.58 lb
3MPS-14-40			40	11.95'	38.00"					×	0.76 lb
3MPS-38-05	0.375" (3/8")	0.250" (1/4")	5	2.40'	13.62"	4" & 4"	150 psi	2.000"	Black, Clear Blue & Light Blue	×	0.31 lb
3MPS-38-10			10	4.40'	19.25"					×	0.57 lb
3MPS-38-15			15	6.30'	24.87"					×	0.81 lb
3MPS-38-20			20	8.30'	30.50"					×	1.06 lb
3MPS-38-30			30	12.20'	41.75"					×	1.56 lb
3MPS-38-40			40	16.00'	53.00"					×	2.05 lb
3MPS-12-05	0.500" (1/2")	0.328" (21/64")	5	3.20'	15.50"	4" & 4"	150 psi	2.625"	Black, Clear Blue & Light Blue	×	0.81 lb
3MPS-12-10			10	6.00'	23.00"					×	1.52 lb
3MPS-12-15			15	8.70'	30.50"					×	2.20 lb
3MPS-12-20			20	11.40'	38.00"					×	2.87 lb
3MPS-12-30			30	16.80'	53.00"					×	4.23 lb
3MPS-12-40			40	22.30'	68.00"					×	5.62 lb

×: Non-Stock (Contact ATP)

Note: See Back Cover or Website for Chemical Compatibility

NSF

MADE IN USA

Bonded Spirals

TECHNIBOND® with Surethane™

Technibond® 3 Bore Spiral, Metric Sizes

Model	OD	ID	Total Turns	Working Length	Compressed Length	Tail Length	Working Pressure @ 75°F	Spiral OD	Colors	Stock	Package Weight
3MPS-04M-05	4mm	2.4mm	5	45cm	26cm	100mm & 100mm	200 psi (13,7 Bar)	24mm	Black, Clear Blue & Light Blue	✓	0.04lb
3MPS-04M-10			10	75cm	32cm					✓	0.08 lb
3MPS-04M-15			15	105cm	38cm					×	0.08 lb
3MPS-04M-20			20	135cm	44cm					×	0.12 lb
3MPS-04M-30			30	194cm	56cm					×	0.15 lb
3MPS-04M-40			40	254cm	68cm					✓	0.19 lb
3MPS-06M-05	6mm	4mm	5	58cm	29cm	100mm & 100mm	180 psi (12,4 Bar)	37mm	Black, Clear Blue & Light Blue	×	0.12 lb
3MPS-06M-10			10	93cm	38cm					×	0.18 lb
3MPS-06M-15			15	145cm	47cm					×	0.30 lb
3MPS-06M-20			20	190cm	56cm					×	0.34 lb
3MPS-06M-30			30	274cm	74cm					×	0.56 lb
3MPS-06M-40			40	360cm	92cm					✓	0.63 lb
3MPS-08M-05	8mm	4.7mm	5	60cm	32cm	100mm & 100mm	175 psi (12 Bar)	41mm	Black, Clear Blue & Light Blue	✓	0.22 lb
3MPS-08M-10			10	105cm	44cm					×	0.39 lb
3MPS-08M-15			15	152cm	56cm					×	0.50 lb
3MPS-08M-20			20	198cm	6cm					×	0.69 lb
3MPS-08M-30			30	288cm	92cm					×	0.96 lb
3MPS-08M-40			40	378cm	116cm					×	1.11 lb
3MPS-10M-05	10mm	6.5mm	5	75cm	35cm	100mm & 100mm	150 psi (10,3 Bar)	52mm	Black, Clear Blue & Light Blue	×	0.39 lb
3MPS-10M-10			10	135cm	50cm					×	0.67 lb
3MPS-10M-15			15	195cm	65cm					×	0.92 lb
3MPS-10M-20			20	258cm	80cm					×	1.25 lb
3MPS-10M-30			30	376cm	110cm					×	1.79 lb
3MPS-10M-40			40	497cm	140cm					✓	2.42 lb
3MPS-12M-05	12mm	8mm	5	97cm	38cm	100mm & 100mm	150 psi (10,3 Bar)	66mm	Black, Clear Blue & Light Blue	×	0.56 lb
3MPS-12M-10			10	180cm	56cm					×	0.98 lb
3MPS-12M-15			15	265cm	74cm					×	1.84 lb
3MPS-12M-20			20	345cm	92cm					×	1.86 lb
3MPS-12M-30			30	507cm	128cm					×	3.50 lb
3MPS-12M-40			40	673cm	164cm					×	4.65 lb

✓: Stocked Assembly, **LQ** Limited Quantities Available, ×: Non-Stock (Contact ATP)

Note: See Back Cover or Website for Chemical Compatibility

MADE IN USA

NSF

TECHNIBOND® with Surethane™

Technibond® 4 Bore Spiral, Fractional Sizes

Model	OD	ID	Total Turns	Working Length	Compressed Length	Tail Length	Working Pressure @ 75°F	Spiral OD	Colors	Stock	Package Weight
4MPS-532-05	0.156" (5/32")	0.093" (3/32")	5	1.80'	9.50"	4" & 4"	240 psi	1.500"	Black, Clear Blue , Light Blue & Clear	×	0.05 lb
4MPS-532-10			10	3.00'	11.12"					×	0.09 lb
4MPS-532-15			15	4.00'	12.62"					×	0.12 lb
4MPS-532-20			20	5.00'	14.25"					×	0.15 lb
4MPS-532-30			30	6.50'	17.50"					×	0.19 lb
4MPS-532-40			40	8.30'	20.62"					×	0.25 lb
4MPS-14-05	0.250" (1/4")	0.156" (5/32")	5	2.50'	10.50"	4" & 4"	180 psi	2.250"	Black, Clear Blue , Light Blue & Clear	×	0.21 lb
4MPS-14-10			10	3.50'	13.00"					×	0.30 lb
4MPS-14-15			15	5.00'	15.50"					×	0.43 lb
4MPS-14-20			20	6.50'	18.00"					×	0.56 lb
4MPS-14-30			30	9.10'	23.00"					×	0.78 lb
4MPS-14-40			40	11.95'	28.00"					×	1.02 lb
4MPS-38-05	0.375" (3/8")	0.250" (1/4")	5	2.50'	11.75"	4" & 4"	150 psi	3.250"	Black, Clear Blue , Light Blue & Clear	×	0.42 lb
4MPS-38-10			10	4.50'	15.50"					×	0.77 lb
4MPS-38-15			15	6.50'	19.25"					×	1.11 lb
4MPS-38-20			20	8.50'	23.00"					✓	1.45 lb
4MPS-38-30			30	12.20'	30.50"					×	2.08 lb
4MPS-38-40			40	16.00'	38.00"					×	2.73 lb
4MPS-12-05	0.500" (1/2")	0.328" (21/64")	5	3.40'	13.00"	4" & 4"	150 psi	4.375"	Black, Clear Blue , Light Blue & Clear	×	1.15 lb
4MPS-12-10			10	6.20'	18.00"					✓	2.07 lb
4MPS-12-15			15	9.00'	23.00"					×	3.03 lb
4MPS-12-20			20	11.50'	28.30"					×	3.89 lb
4MPS-12-30			30	16.80'	38.00"					×	5.64 lb
4MPS-12-40			40	22.30'	48.00"					×	7.49 lb

✓: Stocked Assembly, **LQ** Limited Quantities Available, ×: Non-Stock (Contact ATP)

Note: See Back Cover or Website for Chemical Compatibility

NSF

MADE IN USA

Bonded Spirals

TECHNIBOND® with Surethane™

Technibond® 4 Bore Spiral, Metric Sizes

Model	OD	ID	Total Turns	Working Length	Compressed Length	Tail Length	Working Pressure @ 75°F	Spiral OD	Colors	Stock	Package Weight
4MPS-04M-05	4mm	2.4mm	5	45cm	24cm	100mm & 100mm	200 psi (13,7 Bar)	24mm	Black, Clear Blue , Light Blue & Clear	×	0.07 lb
4MPS-04M-10			10	75cm	28cm					×	0.10 lb
4MPS-04M-15			15	105cm	32cm					×	0.14 lb
4MPS-04M-20			20	135cm	36cm					×	0.19 lb
4MPS-04M-30			30	194cm	44cm					×	0.25 lb
4MPS-04M-40			40	254cm	52cm					×	0.32 lb
4MPS-06M-05	6mm	4mm	5	58cm	26cm	100mm & 100mm	180 psi (12,4 Bar)	37mm	Black, Clear Blue , Light Blue & Clear	×	0.21 lb
4MPS-06M-10			10	103cm	32cm					×	0.33 lb
4MPS-06M-15			15	145cm	38cm					×	0.42 lb
4MPS-06M-20			20	190cm	44cm					×	0.57 lb
4MPS-06M-30			30	274cm	56cm					×	0.68 lb
4MPS-06M-40			40	360cm	38cm					×	0.91 lb
4MPS-08M-05	8mm	4.7mm	5	60cm	28cm	100mm & 100mm	175 psi (12 Bar)	41mm	Black, Clear Blue , Light Blue & Clear	×	0.32 lb
4MPS-08M-10			10	105cm	36cm					×	0.58 lb
4MPS-08M-15			15	152cm	44cm					×	0.74 lb
4MPS-08M-20			20	198cm	52cm					×	1.03 lb
4MPS-08M-30			30	288cm	68cm					×	1.40 lb
4MPS-08M-40			40	378cm	84cm					×	1.91 lb
4MPS-10M-05	10mm	6.5mm	5	75cm	30cm	100mm & 100mm	150 psi (10,3 Bar)	52mm	Black, Clear Blue , Light Blue & Clear	×	0.58 lb
4MPS-10M-10			10	135cm	40cm					×	1.01 lb
4MPS-10M-15			15	195cm	50cm					×	1.51 lb
4MPS-10M-20			20	258cm	60cm					✓	1.86 lb
4MPS-10M-30			30	376cm	80cm					×	3.25 lb
4MPS-10M-40			40	497cm	100cm					×	3.38 lb
4MPS-12M-05	12mm	8mm	5	97cm	32cm	100mm & 100mm	150 psi (10,3 Bar)	66mm	Black, Clear Blue , Light Blue & Clear	×	1.10 lb
4MPS-12M-10			10	180cm	44cm					×	1.68 lb
4MPS-12M-15			15	265cm	56cm					×	2.65 lb
4MPS-12M-20			20	345cm	68cm					×	3.42 lb
4MPS-12M-30			30	507cm	92cm					×	5.25 lb
4MPS-12M-40			40	673cm	116cm					×	6.99 lb

✓: Stocked Assembly, **LQ** Limited Quantities Available, ×: Non-Stock (Contact ATP)

Note: See Back Cover or Website for Chemical Compatibility

MADE IN USA

NSF

Custom Assemblies

Advanced Technology Products can provide custom assemblies for specialized situations. The following services are available:

Custom Tubing Sizes
Custom Spiral Hose Assemblies
Custom Straight Hose Assemblies
Custom Bonded Straight and Spiral Assemblies

Download and submit your Custom Quotation Request at the following web address:

http://www.atp4pneumatics.com/request-quoteinfo/

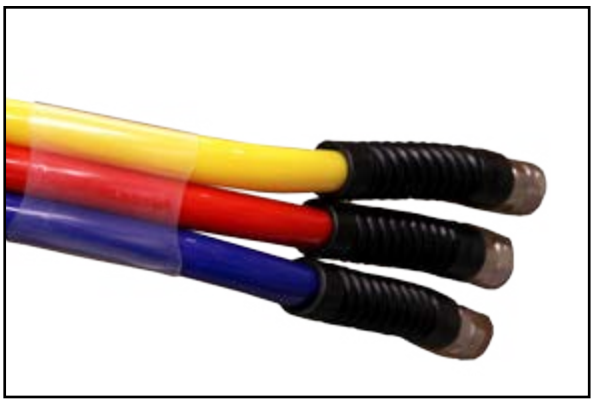

Custom Bonded Polyurethane Tubing or Spiral RFQ Form

Style (Check One)

Bonded Straight Tubing ☐
Bonded Spiral Tubing ☐

Configuration (Check One)

☐ Ribbon ☐ Pyramid ☐ Stacked

Total Units Required (Fill Out)

Units ☐ Total #
Feet ☐
Meters ☐

Tubing Information (Fill Out)

Tube #	1	2	3	4	5	6	7	8	9	10
O.D.										
Color										
Electric *	☐	☐	☐	☐	☐	☐	☐	☐	☐	☐

***Note:** 23 AWG 6 Conductor Stranded Wire is available. Check the Box where each wire will be installed.

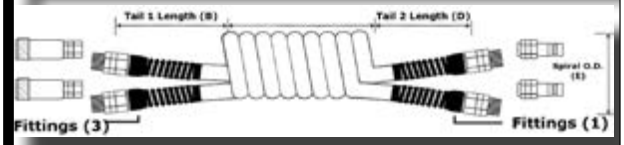

Spiral Specs (Specify Unit of Measure)

Working Length
Tail 1 Length (B)
Tail 2 Length (D)
Spiral O.D. (E)

Packaging Style (Check One)

Shrink Wrapped (Spirals and Tubing) ☐
Spool (Tubing Only) ☐
Bulk Boxed (Spirals and Tubing) ☐

Roll Size (Tubing Only)

25 ft ☐ 250 ft ☐ 25m ☐
50 ft ☐ 500 ft ☐ 100m ☐
100 ft ☐ 1,000 ft ☐
Other

Fittings (Check or Specify)

No ☐ Yes

Pneumatic Couplings (Check or Specify)

No ☐ Yes

Bonded Spirals

TECHNIBOND® with Surethane™

Required Information for Custom Bonding

Straight Tubing
1. Number of Tubes
2. OD of Each Tube
3. Grouping Configuration
4. Colors
5. Total Quantity

Spirals
1. Number of Tubes
2. OD of Each Tube
3. Grouping Configuration
4. Colors
5. Working Length (Including Tails)
6. Length of Each Tail
7. Total Quantity

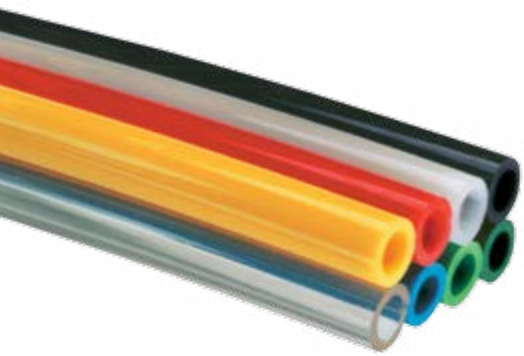

Standard Grouping Configurations

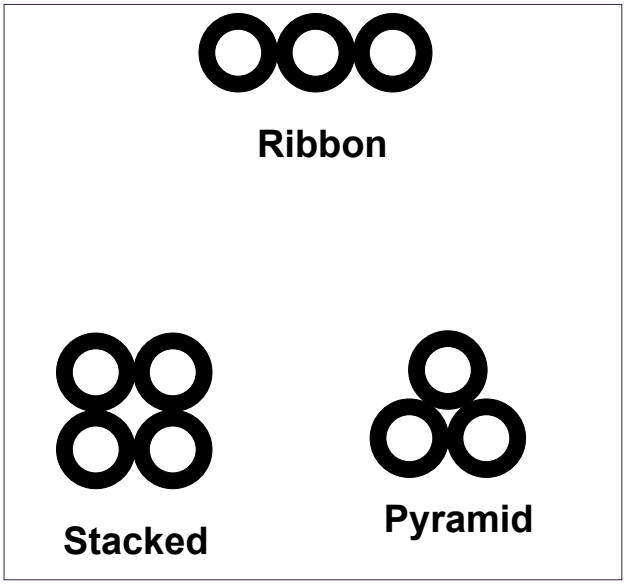

Special Grouping Examples

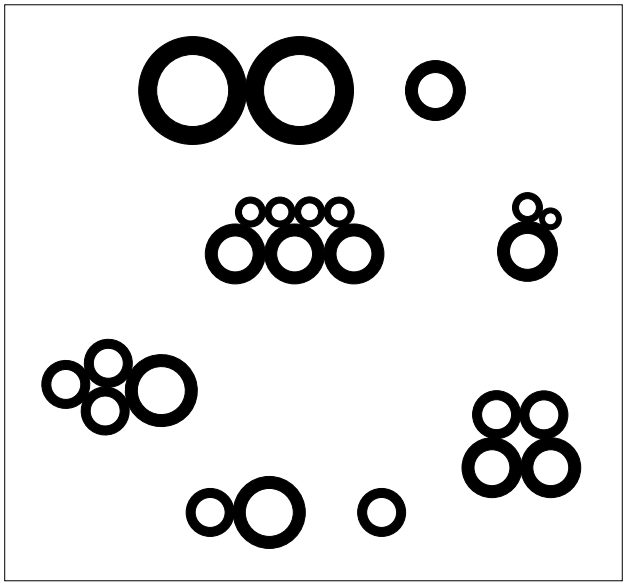

MADE IN USA

NSF

TECHNIFIT™

Push-to-Connect Fittings

Technifit™ Push-to-Connect Fittings

Push-to-Connect Fittings are Offered in Three Styles

TECHNIFIT™

Resin Series

Largest Offering of Sizes and configurations

Specifications	
Working Pressure	150 psi
Temperature Range	32°F to 140°F
Vacuum Rating	29.5 " HG
Metal Body Material	Nickel-Plated Brass
Resin Body Material	PBT Resin
O-Ring	NBR (Buna-N)
Grip Ring	Stainless Steel
Release Ring	Acetal Plastic
Media	Compressed Air/Inert Gases

Page 54

TECHNIFIT™

Nickel-Plated Brass Series

Increased Working Pressure

Specifications	
Working Pressure	217 psi
Temperature Range	4°F to 160°F
Vacuum Rating	28 " HG
Metal Body Material	Nickel-Plated Brass
O-Ring	NBR (Buna-N)
Grip Ring	Stainless Steel
Release Ring	Nickel-Plated Brass
Media	Compressed Air/ Inert Gases

Page 149

TECHNIFIT™

Stainless Steel Series

Highest Working Pressure
Highest Corrosion Resistance

Specifications	
Working Pressure	290 psi
Temperature Range	-20°F to 420°F
Vacuum Rating	29.5 " HG
Metal Body Material	316 Stainless Steel
O-Ring	Viton®
Grip Ring	301 Stainless Steel
Release Ring	316 Stainless Steel
Media	Compressed Air/ Inert Gases

Page 166

Resin Series

The Resin-Series of Technifit™ Push-to-Connect Fittings features a broad offering of configurations and sizes.

Specifications	
Working Pressure	150 psi
Temperature Range	32°F to 140°F
Vacuum Rating	29.5 “ HG
Metal Body Material	Nickel-Plated Brass
Resin Body Material	PBT Resin
O-Ring	NBR (Buna-N)
Grip Ring	Stainless Steel
Release Ring	Acetal Plastic
Media	Compressed Air/Inert Gases

PC - 1/4 - 01 C

Model

Tubing Size	
5/32	5/32” (0.1562”)
3/16	3/16” (0.1875”)
1/4	1/4” (0.2500”)
5/16	5/16” (0.3125”)
3/8	3/8” (0.3750”)
1/2	1/2” (0.5000”)
04	4mm
06	6mm
08	8mm
10	10mm
12	12mm
14	14mm
16	16mm

Thread	
N0	1/16” NPT
N1	1/8” NPT
N2	1/4” NPT
N3	3/8” NPT
N4	1/2” NPT
01	1/8” BSPT (R)
02	1/4” BSPT (R)
03	3/8” BSPT (R)
04	1/2” BSPT (R)
G01	1/8” BSPP (G)
G02	1/4” BSPP (G)
G03	3/8” BSPP (G)
G04	1/2” BSPP (G)
M3	M3 x 0.5
M5	M5 x 0.8
M6	M6 x 1.0
M12	M12 x 1.5
M16	M16 x 1.5
M22	M22 x 1.5
U	10-32 Male

Configuration	
(Blank)	Full Size
C	Compact

Resin-Series: Straight Fittings

Hex Male Straight – PC

Hex Male Straight Fittings feature a hex outer shape, allowing for simplified installation. These fittings are composed of nickel-plated brass with an acetal plastic release ring.

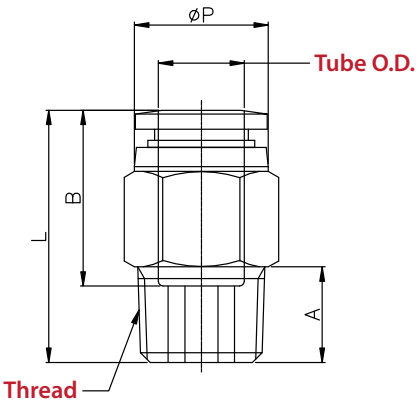

Fractional Tube Sizes

Model	Tube OD	Thread	Package Qty.	Stock	Hex	Length	Weight
PC5/32-U	5/32"	10-32 Male	10	Yes	7/16"	0.88" (22.5mm)	0.20oz (5.80g)
PC5/32-N1		1/8" Male NPT			7/16"	0.76" (19.5mm)	0.27oz (7.80g)
PC5/32-N2		1/4" Male NPT			9/16"	0.86" (22.0mm)	0.52oz (14.8g)
PC5/32-N3		3/8" Male NPT			11/16"	0.90" (23.0mm)	0.87oz (24.8g)
PC3/16-U	3/16"	10-32 Male	10	Yes	7/16"	0.89" (22.8mm)	0.27oz (7.80g)
PC3/16-N1		1/8" Male NPT			7/16"	0.91" (23.3mm)	0.52oz (14.8g)
PC3/16-N2		1/4" Male NPT			9/16"	0.91" (23.3mm)	0.87oz (24.8g)
PC3/16-N3		3/8" Male NPT			11/16"	0.95" (24.3mm)	0.87oz (24.8g)
PC1/4-U	1/4"	10-32 Male	10	Yes	1/2"	0.94" (24.0mm)	0.31oz (8.80g)
PC1/4-N1		1/8" Male NPT			1/2"	0.94" (24.0mm)	0.31oz (8.80g)
PC1/4-N2		1/4" Male NPT			9/16"	0.92" (23.4mm)	0.45oz (12.8g)
PC1/4-N3		3/8" Male NPT			11/16"	0.96" (24.4mm)	0.83oz (23.8g)
PC1/4-N4		1/2" Male NPT			7/8"	1.07" (27.4mm)	1.76oz (49.8g)
PC1/4-01		1/8" Male BSPT (R)			13mm	0.92" (23.5mm)	0.31oz (8.80g)
PC1/4-02		1/4" Male BSPT (R)			14mm	0.90" (22.9mm)	0.45oz (12.8g)
PC1/4-03		3/8" Male BSPT (R)		No	17mm	0.94" (23.9mm)	0.83oz (23.8g)
PC5/16-N1	5/16"	1/8" Male NPT	10	Yes	9/16"	1.12" (28.7mm)	0.44oz (12.7g)
PC5/16-N2		1/4" Male NPT			9/16"	1.04" (26.5mm)	0.51oz (14.7g)
PC5/16-N3		3/8" Male NPT			11/16"	0.96" (24.5mm)	0.76oz (21.7g)
PC5/16-N4		1/2" Male NPT			7/8"	1.08" (27.5mm)	2.10oz (59.7g)
PC5/16-01		1/8" Male BSPT (R)		No	14mm	1.12" (28.5mm)	0.51oz (14.7g)
PC5/16-02		1/4" Male BSPT (R)		Yes	14mm	1.04" (26.5mm)	0.65oz (18.7g)
PC5/16-03		3/8" Male BSPT (R)		No	17mm	0.94" (24.0mm)	0.76oz (21.7g)
PC3/8-N1	3/8"	1/8" Male NPT	10	Yes	11/16"	1.18" (30.0mm)	0.75oz (21.4g)
PC3/8-N2		1/4" Male NPT			11/16"	1.22" (31.0mm)	0.89oz (25.4g)
PC3/8-N3		3/8" Male NPT			11/16"	1.09" (27.7mm)	0.71oz (20.4g)
PC3/8-N4		1/2" Male NPT			7/8"	1.11" (28.2mm)	1.77oz (50.4g)
PC3/8-01		1/8" Male BSPT (R)		No	17mm	1.16" (29.7mm)	0.75oz (21.4g)
PC3/8-02		1/4" Male BSPT (R)		Yes	17mm	1.20" (30.5mm)	0.89oz (25.4g)
PC3/8-03		3/8" Male BSPT (R)		No	17mm	1.07" (27.3mm)	0.71oz (20.4g)
PC3/8-04		1/2" Male BSPT (R)		No	21mm	1.07" (27.2mm)	1.77oz (50.4g)
PC1/2-N1	1/2"	1/8" Male NPT	10	Yes	7/8"	1.31" (33.4mm)	1.13oz (32.1g)
PC1/2-N2		1/4" Male NPT			7/8"	1.40" (35.4mm)	1.23oz (35.1g)
PC1/2-N3		3/8" Male NPT			7/8"	1.25" (31.9mm)	1.27oz (36.1g)
PC1/2-N4		1/2" Male NPT			7/8"	1.23" (31.4mm)	1.62oz (46.1g)
PC1/2-02		1/4" Male BSPT (R)		No	21mm	1.37" (34.9mm)	1.23oz (35.1g)
PC1/2-03		3/8" Male BSPT (R)			21mm	1.23" (31.4mm)	1.27oz (36.1g)
PC1/2-04		1/2" Male BSPT (R)			21mm	1.21" (30.9mm)	1.62oz (46.1g)

Hex Male Straight – PC (continued)

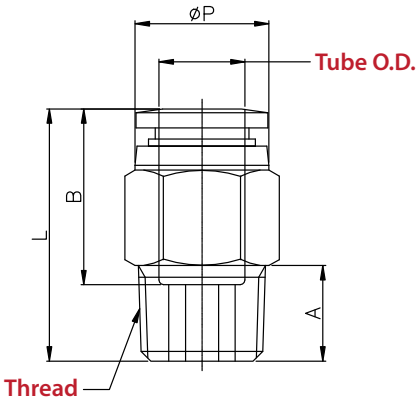

Metric Tube Sizes

Model	Tube OD	Thread	Package Qty.	Stock	Hex	Length	Weight
PC04-M5	4mm	M5 x 0.8	10	Yes	10mm	0.82" (20.9mm)	0.25oz (7.00g)
PC04-M6		M6 x 1.0				0.82" (20.9mm)	0.28oz (8.00g)
PC04-01		1/8" Male BSPT (R)				0.86" (22.0mm)	0.31oz (9.00g)
PC04-02		1/4" Male BSPT (R)			14mm	0.82" (21.0mm)	0.56oz (16.0g)
PC04-03		3/8" Male BSPT (R)			17mm	0.86" (22.0mm)	0.98oz (28.0g)
PC06-01	6mm	1/8" Male BSPT (R)	10	Yes	12mm	0.92" (23.4mm)	0.35oz (10.0g)
PC06-02		1/4" Male BSPT (R)			14mm	0.86" (21.9mm)	0.49oz (14.0g)
PC06-03		3/8" Male BSPT (R)			17mm	0.90" (22.9mm)	0.88oz (25.0g)
PC06-04		1/2" Male BSPT (R			19mm	1.14" (29.2mm)	1.87oz (53.0g)
PC06-G01		1/8" Male BSPP (G)			13mm	0.78" (20.0mm)	0.35oz (9.90g)
PC06-G02		1/4" Male BSPP (G)			15mm	0.84" (21.5mm)	0.60oz (17.0g)
PC06-G03		3/8" Male BSPP (G)			17mm	0.84" (21.5mm)	0.81oz (22.9g)
PC06-M5		M5 x 0.8			12mm	0.90" (23.1mm)	0.35oz (10.0g)
PC06-M6		M6 x 1.0			12mm	0.90" (23.0mm)	0.35oz (10.0g)
PC06-M12		M12 x 1.5		No	N/A	N/A	N/A
PC06-M16		M16 x 1.5					
PC08-01	8mm	1/8" Male BSPT (R)	10	Yes	14mm	1.11" (28.4mm)	0.53oz (15.0g)
PC08-02		1/4" Male BSPT (R)				1.03" (26.4mm)	0.56oz (16.0g)
PC08-03		3/8" Male BSPT (R)			17mm	0.94" (23.9mm)	0.84oz (24.0g)
PC08-04		1/2" Male BSPT (R			19mm	1.15" (29.4mm)	1.72oz (49.0g)
PC08-G01		1/8" Male BSPP (G)			13mm	0.83" (21.2mm)	0.59oz (17.0g)
PC08-G02		1/4" Male BSPP (G)			15mm	0.91" (23.2mm)	0.55oz (15.8g)
PC08-G03		3/8" Male BSPP (G)			17mm	0.87" (22.2mm)	0.84oz (24.0g)
PC08-G04		1/2" Male BSPP (G)		No	21mm	0.94" (23.9mm)	1.19oz (37.9g)
PC08-M12		M12 x 1.5			N/A	N/A	N/A
PC08-M16		M16 x 1.5					
PC08-M22		M22 x 1.5					
PC10-01	10mm	1/8" Male BSPT (R)	10	Yes	17mm	1.17" (29.9mm)	0.52oz (15.0g)
PC10-02		1/4" Male BSPT (R)			17mm	1.23" (31.4mm)	0.56oz (16.0g)
PC10-03		3/8" Male BSPT (R)			17mm	1.08" (27.5mm)	0.85oz (24.0g)
PC10-04		1/2" Male BSPT (R			19mm	1.17" (29.9mm)	1.72oz (49.0g)
PC10-G01		1/8" Male BSPP (G)			17mm	1.13" (28.9mm)	0.80oz (22.9g)
PC10-G02		1/4" Male BSPP (G)			17mm	1.13" (28.9mm)	0.80oz (22.9g)
PC10-G03		3/8" Male BSPP (G)			17mm	1.00" (25.4mm)	0.71oz (20.1g)
PC10-G04		1/2" Male BSPP (G)			21mm	1.01" (25.9mm)	1.38oz (39.1g)
PC10-M12		M1 x 1.5		No	N/A	N/A	N/A
PC10-M14		M14 x 1.5					
PC10-M16		M16 x 1.5					
PC10-M22		M22 x 1.5					

Hex Male Straight – PC (continued)

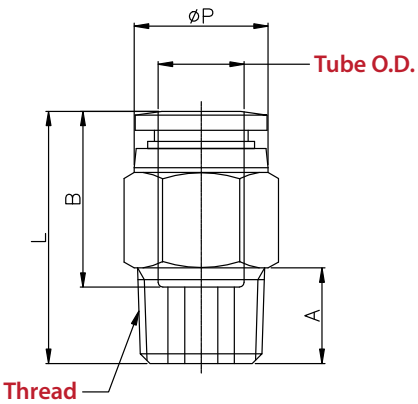

Metric Tube Sizes

Model	Tube OD	Thread	Package Qty.	Stock	Hex	Length	Weight
PC12-01	12mm	1/8" Male BSPT (R)	10	Yes	19mm	1.30" (33.2mm)	0.74oz (21.0g)
PC12-02		1/4" Male BSPT (R)				1.32" (33.7mm)	0.88oz (24.0g)
PC12-03		3/8" Male BSPT (R)				1.20" (30.7mm)	0.88oz (24.0g)
PC12-04		1/2" Male BSPT (R				1.18" (30.2mm)	1.58oz (45.0g)
PC12-G02		1/4" Male BSPP (G)				1.24" (31.7mm)	1.02oz (28.9g)
PC12-G03		3/8" Male BSPP (G)				1.07" (27.2mm)	0.81oz (22.9g)
PC12-G04		1/2" Male BSPP (G)			21mm	1.11" (28.2mm)	1.32oz (37.4g)
PC12-M12		M12 x 1.5		No	N/A	N/A	N/A
PC12-M14		M14 x 1.5					
PC12-M16		M16 x 1.5					
PC12-M22		M22 x 1.5					
PC14-03	14mm	3/8" Male BSPT (R)	5	Yes	22mm	1.44" (36.6mm)	1.48oz (42.0g)
PC14-04		1/2" Male BSPT (R				1.33" (34.0mm)	1.73oz (49.0g)
PC14-G03		3/8" Male BSPP (G)		No		1.31" (33.5mm)	1.69oz (47.9g)
PC14-G04		1/2" Male BSPP (G)			24mm	1.29" (32.8mm)	2.01oz (56.9g)
PC16-03	16mm	3/8" Male BSPT (R)	5	Yes	24mm	1.47" (37.5mm)	1.79oz (51.0g)
PC16-04		1/2" Male BSPT (R				1.59" (40.5mm)	2.29oz (65.0g)
PC16-G03		3/8" Male BSPP (G)				1.37" (35.0mm)	1.93oz (54.9g)
PC16-G04		1/2" Male BSPP (G)				1.39" (35.5mm)	2.19oz (62.0g)

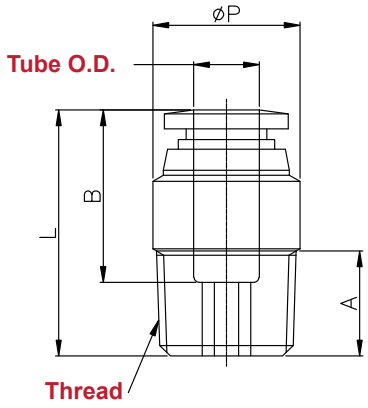

Round Male Straight – POC

Round Male Straight Fittings provide a small, compact package with an internal hex. These fittings are composed of nickel-plated brass with an acetal plastic release ring.

Fractional Tube Sizes

Model	Tube OD	Thread	Package Qty.	Stock	Internal Hex	Length	Weight
POC5/32-U	5/32"	10-32 Male	10	Yes	3/32"	0.84" (21.4mm)	0.20oz (5.80g)
POC5/32-N1		1/8" Male NPT			1/8"	0.82" (21.0mm)	0.23oz (6.80g)
POC5/32-N2		1/4" Male NPT				0.86" (22.0mm)	0.48oz (13.8g)
POC3/16-U	3/16"	10-32 Male	10	No	3/32"	0.89" (22.8mm)	0.20oz (5.80g)
POC3/16-N1		1/8" Male NPT		Yes	1/8"		0.23oz (6.80g)
POC3/16-N2		1/4" Male NPT		No		0.93" (23.8mm)	0.48oz (13.8g)
POC1/4-U	1/4"	10-32 Male	10	Yes	3/32"	0.95" (24.2mm)	0.31oz (8.80g)
POC1/4-N1		1/8" Male NPT			3/16"	0.93" (23.7mm)	0.34oz (9.80g)
POC1/4-N2		1/4" Male NPT				0.94" (23.9mm)	0.45oz (12.8g)
POC1/4-01		1/8" Male BSPT (R)		No	5mm	0.94" (23.9mm)	0.35oz (9.80g)
POC1/4-02		1/4" Male BSPT (R)					0.45oz (12.8g)
POC5/16-N1	5/16"	1/8" Male NPT	10	Yes	3/16"	1.12" (28.7mm)	0.51oz (14.7g)
POC5/16-N2		1/4" Male NPT			1/4"	1.04" (26.5mm)	0.62oz (17.7g)
POC5/16-N3		3/8" Male NPT		No		0.98" (25.0mm)	0.80oz (22.7g)
POC5/16-01		1/8" Male BSPT (R)			6mm	1.10" (28.0mm)	0.51oz (14.7g)
POC5/16-02		1/4" Male BSPT (R)		Yes		1.02" (26.0mm)	0.62oz (17.7g)
POC3/8-N1	3/8"	1/8" Male NPT	10	No	3/16"	1.16" (29.7mm)	0.82oz (23.4g)
POC3/8-N2		1/4" Male NPT		Yes	1/4"	1.11" (28.2mm)	0.89oz (25.4g)
POC3/8-N3		3/8" Male NPT			5/16"		1.21oz (34.4g)
POC3/8-N4		1/2" Male NPT		No		1.14" (29.2mm)	1.53oz (43.4g)
POC3/8-01		1/8" Male BSPT (R)			6mm	1.07" (27.2mm)	0.89oz (25.4g)
POC3/8-02		1/4" Male BSPT (R)				1.03" (26.2mm)	1.24oz (35.4g)
POC1/2-N2	1/2"	1/4" Male NPT	10	No	1/4"	1.39" (35.4mm)	1.09oz (31.1g)
POC1/2-N3		3/8" Male NPT		Yes	3/8"	1.29" (33.0mm)	1.20oz (34.1g)
POC1/2-N4		1/2" Male NPT		No			1.52oz (43.1g)

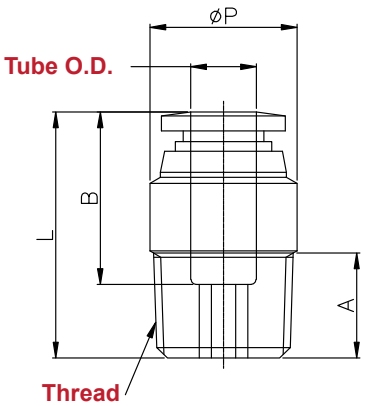

Round Male Straight – PC (continued)

Metric Tube Sizes

Model	Tube OD	Thread	Package Qty.	Stock	Internal Hex	Length	Weight
POC04-01	4mm	1/8" Male BSPT (R)	10	Yes	3mm	0.81" (20.8mm)	0.28oz (8.00g)
POC04-02		1/4" Male BSPT (R)					0.53oz (15.0g)
POC04-03		3/8" Male BSPT (R)					0.85oz (24.0g)
POC04-M5		M5 x 0.8			2mm	0.82" (20.9mm)	0.25oz (6.00g)
POC04-M6		M6 x 1.0		No	3mm	0.83" (21.3mm)	0.25oz (6.00g)
POC06-01	6mm	1/8" Male BSPT (R)	10	Yes	4mm	0.89" (22.7mm)	0.32oz (9.00g)
POC06-02		1/4" Male BSPT (R)				0.92" (23.4mm)	0.53oz (15.0g)
POC06-03		3/8" Male BSPT (R)		No			0.90oz (25.0g)
POC06-M5		M5 x 0.8		Yes	2mm	0.90" (23.1mm)	0.28oz (8.00g)
POC06-M6		M6 x 1.0			3mm	0.92" (23.5mm)	0.28oz (8.00g)
POC08-01	8mm	1/8" Male BSPT (R)	10	Yes	5mm	1.09" (27.9mm)	0.49oz (14.0g)
POC08-02		1/4" Male BSPT (R)			6mm	1.01" (25.9mm)	0.49oz (14.0g)
POC08-03		3/8" Male BSPT (R)					0.90oz (25.0g)
POC08-04		1/2" Male BSPT (R)		No		1.07" (27.3mm)	1.69oz (46.0g)
POC10-01	10mm	1/8" Male BSPT (R)	10	Yes	5mm	1.17" (29.9mm)	0.67oz (19.0g)
POC10-02		1/4" Male BSPT (R)			6mm	1.09" (27.8mm)	0.67oz (17.0g)
POC10-03		3/8" Male BSPT (R)			8mm		0.79oz (22.0g)
POC10-04		1/2" Male BSPT (R)					1.41oz (40.0g)
POC12-01	12mm	1/8" Male BSPT (R)	10	No	5mm	1.26" (32.2mm)	0.85oz (24.0g)
POC12-02		1/4" Male BSPT (R)		Yes	6mm	1.33" (33.8mm)	0.92oz (26.0g)
POC12-03		3/8" Male BSPT (R)			8mm	1.24" (31.7mm)	0.92oz (26.0g)
POC12-04		1/2" Male BSPT (R)				1.18" (30.2mm)	1.41oz (40.0g)

Hex Female Straight - PCF

Equipped with a hex body, these female threaded fittings are constructed of nickel-plated brass.

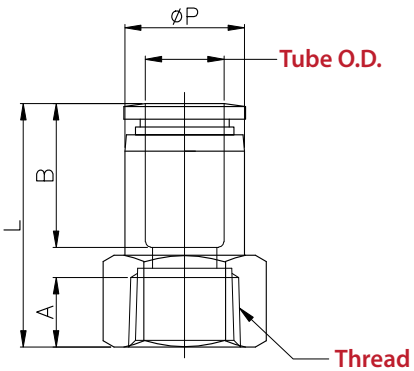

Fractional Tube Sizes

Model	Tube OD	Thread	Package Qty.	Stock	Hex	Length	Weight
PCF5/32-N1	5/32"	1/8" Female NPT	10	Yes	9/16"	1.06" (27.1mm)	0.55oz (15.8g)
PCF5/32-N2		1/4" Female NPT			11/16"	1.16" (29.6mm)	0.70oz (19.8g)
PCF3/16-N1	3/16"	1/8" Female NPT	10	Yes	9/16"	1.11" (28.3mm)	0.56oz (15.8g)
PCF3/16-N2		1/4" Female NPT			11/16"	1.19" (30.3mm)	0.70oz (19.8g)
PCF1/4-N1	1/4"	1/8" Female NPT	10	Yes	9/16"	1.13" (28.8mm)	0.66oz (18.8g)
PCF1/4-N2		1/4" Female NPT			11/16"	1.21" (30.8mm)	0.83oz (23.8g)
PCF1/4-N3		3/8" Female NPT			7/8"	1.29" (32.8mm)	1.40oz (39.8g)
PCF1/4-01		1/8" Female BSPT (R)		No	14mm	1.13" (28.8mm)	0.66oz (18.8g)
PCF1/4-02		1/4" Female BSPT (R)			17mm	1.21" (30.8mm)	0.83oz (23.8g)
PCF5/16-N1	5/16"	1/8" Female NPT	10	Yes	9/16"	1.16" (29.5mm)	0.65oz (18.7g)
PCF5/16-N2		1/4" Female NPT			11/16"	1.25" (32.0mm)	0.90oz (25.7g)
PCF5/16-N3		3/8" Female NPT		No	7/8"	1.27" (32.5mm)	1.36oz (38.7g)
PCF5/16-N4		1/2" Female NPT			15/16"	1.35" (34.5mm)	1.61oz (45.7g)
PCF5/16-01		1/8" Female BSPT (R)			17mm	1.16" (29.5mm)	0.66oz (18.7g)
PCF5/16-02		1/4" Female BSPT (R)				1.24" (31.5mm)	0.90oz (25.7g)
PCF3/8-N1	3/8"	1/8" Female NPT	10	Yes	11/16"	1.30" (33.1mm)	1.03oz (29.4g)
PCF3/8-N2		1/4" Female NPT					1.30" (33.1mm)
PCF3/8-N3		3/8" Female NPT			7/8"	1.34" (34.1mm)	1.36oz (38.7g)
PCF3/8-N4		1/2" Female NPT			15/16"	1.44" (36.7mm)	1.61oz (45.7g)
PCF3/8-02		1/4" Female BSPT (R)		No	17mm	1.30" (33.1mm)	0.93oz (26.4g)
PCF3/8-03		3/8" Female BSPT (R)			22mm	1.34" (34.1mm)	1.39oz (39.4g)
PCF1/2-N2	1/2"	1/4" Female NPT	5	Yes	11/8"	1.47" (37.5mm)	1.87oz (53.1g)
PCF1/2-N3		3/8" Female NPT			7/8"		1.47" (37.5mm)
PCF1/2-N4		1/2" Female NPT			15/16"	1.55" (39.4mm)	1.84oz (52.2g)

Technifit™ Push-to-Connect Fittings

Hex Female Straight – PCF (continued)

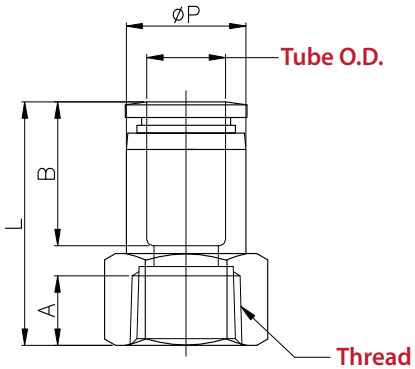

Metric Tube Sizes

Model	Tube OD	Thread	Package Qty.	Stock	Hex	Length	Weight
PCF04-01	4mm	1/8" Female BSPT (R)	10	Yes	14mm	1.06" (27.1mm)	0.59oz (17.0g)
PCF04-02		1/4" Female BSPT (R)			17mm	1.18" (30.2mm)	0.77oz (22.0g)
PCF04-03		3/8" Female BSPT (R)		No	22mm	1.22" (31.2mm)	1.34oz (38.0g)
PCF04-G01		1/8" Female BSPP (G)			14mm	1.06" (27.1mm)	0.57oz (16.0g)
PCF04-G02		1/4" Female BSPP (G)			17mm	1.14" (29.1mm)	0.71oz (20.0g)
PCF04-G03		3/8" Female BSPP (G)			22mm	1.18" (30.1mm)	1.23oz (35.0g)
PCF04-M5		M5 x 0.8		Yes	12mm	1.02" (26.0mm)	0.56oz (16.0g)
PCF06-01	6mm	1/8" Female BSPT (R)	10	Yes	14mm	1.11" (28.2mm)	0.63oz (18.0g)
PCF06-02		1/4" Female BSPT (R)			17mm	1.18" (30.2mm)	0.84oz (24.0g)
PCF06-03		3/8" Female BSPT (R)			22mm	1.22" (31.2mm)	1.34oz (38.0g)
PCF06-04		1/2" Female BSPT (R)		No	24mm	1.30" (33.2mm)	1.44oz (41.0g)
PCF06-G01		1/8" Female BSPP (G)			14mm	1.11" (28.2mm)	0.59oz (17.0g)
PCF06-G02		1/4" Female BSPP (G)			17mm	1.18" (30.2mm)	0.81oz (23.0g)
PCF06-G03		3/8" Female BSPP (G)			22mm	1.22" (31.2mm)	1.26oz (36.0g)
PCF06-M5		M5 x 0.8			12mm	1.05" (26.7mm)	0.70oz (20.0g)
PCF08-01	8mm	1/8" Female BSPT (R)	10	Yes	14mm	1.15" (29.4mm)	0.67oz (19.0g)
PCF08-02		1/4" Female BSPT (R)			17mm	1.23" (31.4mm)	0.84oz (24.0g)
PCF08-03		3/8" Female BSPT (R)			22mm	1.27" (32.4mm)	1.37oz (39.0g)
PCF08-04		1/2" Female BSPT (R)			24mm	1.35" (34.4mm)	1.44oz (41.0g)
PCF08-G01		1/8" Female BSPP (G)		No	14mm	1.15" (29.4mm)	0.67oz (19.0g)
PCF08-G02		1/4" Female BSPP (G)		Yes	17mm	1.23" (31.4mm)	0.84oz (24.0g)
PCF08-G03		3/8" Female BSPP (G)		No	22mm	1.27" (32.4mm)	1.34oz (38.0g)
PCF08-G04		1/2" Female BSPP (G)			24mm	1.35" (34.4mm)	1.30oz (37.0g)
PCF10-01	10mm	1/8" Female BSPT (R)	10	Yes	17mm	1.28" (32.6mm)	1.09oz (31.0g)
PCF10-02		1/4" Female BSPT (R)			17mm	1.28" (32.6mm)	0.92oz (26.0g)
PCF10-03		3/8" Female BSPT (R)			22mm	1.33" (33.6mm)	1.45oz (41.0g)
PCF10-04		1/2" Female BSPT (R)			24mm	1.40" (35.6mm)	1.52oz (43.0g)
PCF10-G01		1/8" Female BSPP (G)		No	17mm	1.28" (32.6mm)	1.09oz (31.0g)
PCF10-G02		1/4" Female BSPP (G)		Yes	17mm	1.28" (32.6mm)	0.88oz (25.0g)
PCF10-G03		3/8" Female BSPP (G)		No	22mm	1.32" (33.6mm)	1.37oz (39.0g)
PCF10-G04		1/2" Female BSPP (G)			24mm	1.41" (35.6mm)	1.48oz (42.0g)
PCF12-02	12mm	1/4" Female BSPT (R)	10	Yes	22mm	1.46" (37.1mm)	1.90oz (54.0g)
PCF12-03		3/8" Female BSPT (R)			22mm	1.46" (37.1mm)	1.62oz (46.0g)
PCF12-04		1/2" Female BSPT (R)	5		24mm	1.53" (39.1mm)	1.76oz (50.0g)
PCF12-G02		1/4" Female BSPP (G)	10	No	22mm	1.46" (37.1mm)	1.83oz (52.0g(
PCF12-G03		3/8" Female BSPP (G)			22mm	1.46" (37.1mm)	1.58oz (45.0g)
PCF12-G04		1/2" Female BSPP (G)	5		24mm	1.53" (39.1mm)	1.69oz (48.0g)

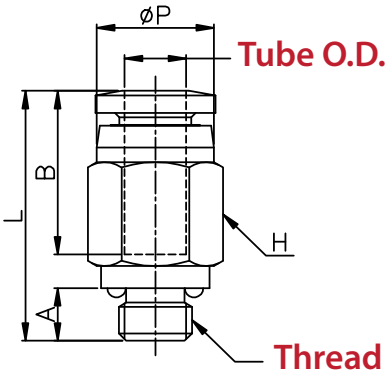

Compact Hex Male Straight PC-C

Featuring a compact size, these fittings are in a straight male hex configuration.

Fractional Tube Sizes

Model	Tube OD	Thread	Package Qty.	Stock	Hex	Length	Weight
PC1/8-UC	1/8"	10-32 Male	10	Yes	5/16"	0.64" (16.4mm)	0.07oz (2.00g)
PC1/8-NOC		1/16" Male NPT		No		0.70" (18.0mm)	0.14oz (4.00g)
PC1/8-N1C		1/8" Male NPT		Yes	7/816"	0.68" (17.5mm)	0.21oz (6.00g)
PC1/8-N2C		1/4" Male NPT			9/16"	0.84" (21.5mm)	0.53oz (15.0g)
PC1/8-M3C		M3 x 0.5		No	7mm	0.63" (16.1mm)	0.04oz (1.00g)
PC1/8-M5C		M5 x 0.8			8mm	0.64" (16.3mm)	0.11oz (3.00g)
PC1/8-M6C		M6 x 1.0				0.65" (16.7mm)	
PC1/8-01C		1/8" Male BSPT (R)			10mm	0.66" (16.9mm)	0.14oz (4.00g)
PC5/32-UC	5/32"	10-32 Male	10	Yes	5/16"	0.66" (16.9mm)	0.11oz (3.00g)
PC5/32-N0C		1/16" Male NPT		No		0.74" (18.9mm)	0.18oz (5.00g)
PC5/32-N1C		1/8" Male NPT		Yes	7/16"	0.70" (17.9mm)	0.32oz (9.00g)
PC5/32-01C		1/8" Male BSPT (R)		No	10mm	0.65" (16.7mm)	0.21oz (6.00g)
PC5/32-M3C		M3 x 0.5			8mm	0.66" (16.8mm)	0.11oz (3.00g)
PC5/32-M5C		M5 x 0.8				0.67" (17.7mm)	
PC5/32-M6C		M6 x 1.0					
PC1/4-UC	1/4"	10-32 Male	10	Yes	7/16"	0.74" (18.9mm)	0.35oz (10.0g)
PC1/4-N0C		1/16" Male NPT				0.86" (22.0mm)	0.53oz (15.0g)
PC1/4-N1C		1/8" Male NPT				0.76" (19.5mm)	0.64oz (18.0g)
PC1/4-01C		1/8" Male BSPT (R)		No	11mm	0.75" (19.3mm)	
PC1/4-M5C		M5 x 0.8		Yes		0.74" (18.9mm)	0.35oz (10.0g)
PC1/4-M6C		M6 x 1.0		No		0.76" (19.4mm)	0.53oz (15.0g)

Metric Tube Sizes

Model	Tube OD	Thread	Package Qty.	Stock	Hex	Length	Weight
PC04-01C	4mm	1/8" Male BSPT (R)	10	No	10mm	0.66" (16.9mm)	0.21oz (6.00g)
PC04-G01C		1/8" Male BSPP (G)			12mm	0.68" (17.4mm)	0.28oz (8.00g)
PC04-M3C		M3 x 0.5		Yes	8mm	0.63" (16.1mm)	0.14oz (4.00g)
PC04-M5C		M5 x 0.8				0.64" (16.3mm)	
PC04-M6C		M6 x 1.0		No		0.65" (16.7mm)	
PC06-01C	6mm	1/8" Male BSPT (R)	10	No	10mm	0.74" (18.9mm)	0.24oz (7.00g)
PC06-G01C		1/8" Male BSPP (G)			12mm	0.70" (17.9mm)	0.32oz (9.00g)
PC06-M5C		M5 x 0.8		Yes	10mm	0.73" (18.6mm)	0.17oz (5.00g)
PC06-M6C		M6 x 1.0		No		0.74" (18.9mm)	0.21oz (6.00g)

Technifit™ Push-to-Connect Fittings

Compact Round Male Straight POC-C

Featuring a compact size, these fittings are in a straight male round configuration, providing the smallest package. Includes an internal hex for installation.

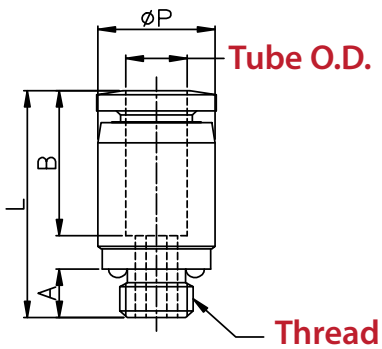

Fractional Tube Sizes

Model	Tube OD	Thread	Package Qty.	Stock	Hex	Length	Weight
POC1/8-UC	1/8"	10-32 Male	10	No	3/32"	0.64" (16.4mm)	0.07oz (2.00g)
POC1/8-N0C		1/16" Male NPT				0.70" (18.0mm)	0.18oz (5.00g)
POC1/8-N1C		1/8" Male NPT		Yes		0.64" (16.3mm)	0.21oz (6.00g)
POC1/8-01C		1/8" Male BSPT (R)		No	2mm	0.61" (15.7mm)	
POC1/8-M3C		M3 x 0.5			1.5mm	0.63" (16.1mm)	0.07oz (2.00g)
POC1/8-M5C		M5 x 0.8			2mm	0.64" (16.3mm)	0.14oz (4.00g)
POC1/8-M6C		M6 x 1.0				0.65" (16.7mm)	
POC5/32-UC	5/32"	10-32 Male	10	Yes	3/32"	0.66" (17.0mm)	0.11oz (3.00g)
POC5/32-N0C		1/16" Male NPT		No		0.74" (18.9mm)	0.14oz (16.0g)
POC5/32-N1C		1/8" Male NPT		Yes		0.63" (16.2mm)	0.32oz (18.0g)
POC5/32-01C		1/8" Male BSPT (R)		No	3mm	0.61" (15.7mm)	0.21oz (6.00g)
POC5/32-M3C		M3 x 0.5			1.5mm	0.66" (16.9mm)	0.11oz (3.00g)
POC5/32-M5C		M5 x 0.8			2.5mm		0.14oz (4.00g)
POC5/32-M6C		M6 x 1.0			3mm	0.67" (17.2mm)	
POC1/4-UC	1/4"	10-32 Male	10	No	3/32"	0.74" (19.0mm)	0.42oz (12.0g)
POC1/4-N0C		1/16" Male NPT			5/32"	0.86" (22.0mm)	0.56oz (16.0g)
POC1/4-N1C		1/8" Male NPT				0.76" (19.5mm)	0.64oz (18.0g)
POC1/4-01C		1/8" Male BSPT (R)			4mm	0.75" (19.3mm)	
POC1/4-M5C		M5 x 0.8			2.5mm		0.42oz (12.0g)
POC1/4-M6C		M6 x 1.0				0.74" (18.9mm)	0.56oz (16.0g)

Metric Tube Sizes

Model	Tube OD	Thread	Package Qty.	Stock	Hex	Length	Weight
POC04-01C	4mm	1/8" Male BSPT (R)	10	No	3mm	0.61" (15.7mm)	0.18oz (5.00g)
POC04-M3C		1/8" Male BSPP (G)		Yes	1.5mm	0.66" (16.8mm)	0.11oz (2.00g)
POC04-M5C		M3 x 0.5		No	2.5mm	0.66" (16.9mm)	0.14oz (2.00g)
POC04-M6C		M5 x 0.8			3mm	0.67" (17.2mm)	0.14oz (4.00g)
POC06-01C	6mm	M6 x 1.0	10	No	4mm	0.74" (18.9mm)	0.21oz (6.00g)
POC06-M5C		1/8" Male BSPT (R)			2.5mm	0.73" (18.6mm)	0.18oz (5.00g)
POC06-M6C		1/8" Male BSPP (G)			3mm	0.73" (18.6mm)	0.18oz (5.00g)

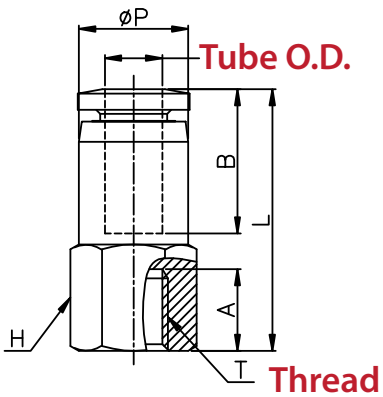

Compact Hex Female Straight – PCF-C

Featuring a compact size, these fittings are in a straight female hex configuration.

Fractional Tube Sizes

Model	Tube OD	Thread	Package Qty.	Stock	Hex	Length	Weight
PCF1/8-UC	1/8"	10-32 Female	10	Yes	5/16"	0.74" (18.8mm)	0.07oz (2.00g)
PCF1/8-N0C		1/16" Female NPT		No	13/32"	0.80" (20.5mm)	0.10oz (3.00g)
PCF1/8-N1C		1/8" Female NPT		Yes	7/16"	0.88" (22.5mm)	
PCF1/8-N2C		1/4" Female NPT			11/16"	0.99" (25.3mm)	0.24oz (7.00g)
PCF1/8-01C		1/8" Female BSPT (R)		No	11mm	0.63" (16.2mm)	0.14oz (4.00g)
PCF1/8-M3C		M3 x 0.5			8mm	0.73" (18.7mm)	
PCF1/8-M5C		M5 x 0.8					0.17oz (5.00g)
PCF1/8-M6C		M6 x 1.0				0.88' (22.4mm)	0.10oz (3.00g)
PCF5/32-UC	5/32"	10-32 Female	10	Yes	5/16"	0.75" (19.2mm)	0.17oz (5.00g)
PCF5/32-N0C		1/16" Female NPT		No	13/32"	0.83" (21.2mm)	0.21oz (6.00g)
PCF5/32-N1C		1/8" Female NPT		Yes	7/16"	0.89" (22.7mm)	
PCF5/32-01C		1/8" Female BSPT (R)		No	12mm		0.24oz (7.00g)
PCF5/32-M3C		M3 x 0.5			8mm	0.69" (17.7mm)	0.14oz (4.00g)
PCF5/32-M5C		M5 x 0.8				0.75" (19.2mm)	
PCF5/32-M6C		M6 x 1.0					0.17oz (5.00g)
PCF1/4-UC	1/4"	10-32 Female	10	Yes	7/16"	0.80" (20.5mm)	0.21oz (6.00g)
PCF1/4-N0C		1/16" Female NPT				0.88" (22.5mm)	0.24oz (7.00g)
PCF1/4-N1C		1/8" Female NPT				0.93" (23.8mm)	0.28oz (8.00g)
PCF1/4-01C		1/8" Female BSPT (R)		No	12mm		
PCF1/4-M5C		M5 x 0.8			10mm	0.88" (22.5mm)	0.21oz (6.00g)
PCF1/4-M6C		M6 x 1.0				0.80" (20.5mm)	0.24oz (7.00g)

Metric Tube Sizes

Model	Tube OD	Thread	Package Qty.	Stock	Hex	Length	Weight
PCF04-01C	4mm	1/8" Female BSPT (R)	10	No	12mm	0.89" (22.7mm)	0.17oz (5.00g)
PCF04-M3C		M3 x 0.5			8mm	0.75" (19.2mm)	0.10oz (3.00g)
PCF04-M5C		M5 x 0.8					0.14oz (4.00g)
PCF04-M6C		M6 x 1.0				0.89" (22.7mm)	
PCF06-01C	6mm	1/8" Female BSPT (R)	10	No	12mm	0.93" (23.7mm)	0.21oz (6.00g)
PCF06-M5C		M5 x 0.8			10mm	0.77" (19.7mm)	0.17oz (5.00g)
PCF06-M6C		M6 x 1.0					

Resin-Series: Elbow Fittings

Swivel Male Elbow – PL

Swivel Male Elbows are configured in a 90° elbow with an external hex for installation. The swivel body enables flexibility during both installation and operation.

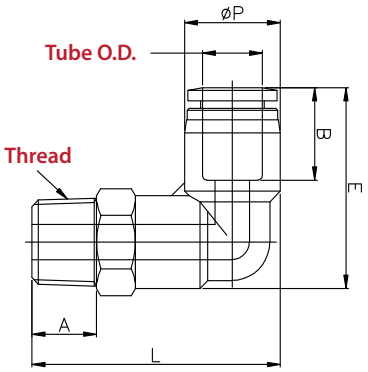

Fractional Tube Sizes

Model	Tube OD	Thread	Package Qty.	Stock	Hex	Length	Weight
PL5/32-U	5/32"	10-32 Male	10	Yes	7/16"	0.84" (21.4mm)	0.27oz (7.80g)
PL5/32-N1		1/8" Male NPT				0.98" (25.0mm)	0.34oz (9.80g)
PL5/32-N2		1/4" Male NPT			9/16"	1.10" (28.0mm)	0.59oz (16.8g)
PL3/16-U	3/16"	10-32 Male	10	Yes	7/16"	0.84" (21.4mm)	0.27oz (7.70g)
PL3/16-N1		1/8" Male NPT				0.98" (25.0mm)	0.51oz (14.7g)
PL3/16-N2		1/4" Male NPT			9/16"	1.10" (28.0mm)	0.69oz (19.7g)
PL3/16-N3		3/8" Male NPT		No	11/16"	1.14" (29.0mm)	1.15oz (32.7g)
PL1/4-U	1/4"	10-32 Male	10	Yes	1/2"	1.01" (25.9mm)	0.42oz (11.7g)
PL1/4-N1		1/8" Male NPT				1.09" (27.8mm)	0.51oz (14.7g)
PL1/4-N2		1/4" Male NPT			9/16"	1.20" (30.5mm)	0.69oz (19.7g)
PL1/4-N3		3/8" Male NPT			11/16"	1.24" (31.5mm)	1.16oz (32.7g)
PL1/4-01		1/8" Male BSPT (R)			12mm	1.06" (27.0mm)	0.51oz (14.7g)
PL1/4-02		1/4" Male BSPT (R)		No	14mm	1.18" (30.0mm)	0.69oz (19.7g)
PL1/4-03		3/8" Male BSPT (R)			17mm	1.22" (31.0mm)	1.15oz (32.7g)
PL5/16-N1	5/16"	1/8" Male NPT	10	Yes	9/16"	1.16" (29.5mm)	0.63oz (17.7g)
PL5/16-N2		1/4" Male NPT				1.24" (31.5mm)	0.80oz (22.7g)
PL5/16-N3		3/8" Male NPT			11/16"	1.25" (32.5mm)	1.25oz (35.7g)
PL5/16-N4		1/2" Male NPT			7/8"		1.98oz (55.7g)
PL5/16-01		1/8" Male BSPT (R)		No	14mm	1.10" (28.0mm)	0.62oz (17.7g)
PL5/16-02		1/4" Male BSPT (R)		Yes		1.22" (31.0mm)	0.80oz (22.7g)
PL5/16-03		3/8" Male BSPT (R)		No	17mm	1.25" (32.0mm)	1.25oz (35.7g)
PL3/8-N1	3/8"	1/8" Male NPT	10	Yes	11/16"	1.18" (30.0mm)	0.85oz (24.2g)
PL3/8-N2		1/4" Male NPT				1.25" (32.0mm)	0.99oz (28.2g)
PL3/8-N3		3/8" Male NPT				1.29" (33.0mm)	1.17oz (33.2g)
PL3/8-N4		1/2" Male NPT			7/8"	1.41" (36.0mm)	1.87oz (53.2g)
PL3/8-01		1/8" Male BSPT (R)		No	17mm	0.95" (24.2mm)	0.85oz (24.2g)
PL3/8-02		1/4" Male BSPT (R)		Yes		1.11" (28.2mm)	0.99oz (28.2g)
PL3/8-03		3/8" Male BSPT (R)		No		1.30" (33.2mm)	1.17oz (33.2g)
PL3/8-04		1/2" Male BSPT (R)			21mm	2.08" (53.2mm)	1.88oz (53.2g)
PL1/2-N2	1/2"	1/4" Male NPT	10	Yes	3/4"	1.39" (35.5mm)	1.26oz (36.0g)
PL1/2-N3		3/8" Male NPT				1.42" (36.5mm)	1.58oz (45.0g)
PL1/2-N4		1/2" Male NPT			7/8"	1.55" (39.5mm)	2.22oz (63.0g)
PL1/2-02		1/4" Male BSPT (R)			19mm	1.41" (36.0mm)	1.27oz (36.0g)
PL1/2-03		3/8" Male BSPT (R)				1.77" (45.0mm)	1.59oz (45.0g)
PL1/2-04		1/2" Male BSPT (R)			21mm	2.48" (63.0mm)	2.22oz (63.0g)

Swivel Male Elbow – PL (continued)

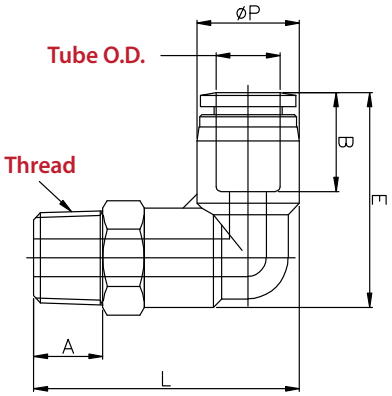

Metric Tube Sizes

Model	Tube OD	Thread	Package Qty.	Stock	Hex	Length	Weight
PL04-01	4mm	1/8" Male BSPT (R)	10	Yes	10mm	0.96" (24.5mm)	0.35oz (10.0g)
PL04-02		1/4" Male BSPT (R)			14mm	1.04" (26.5mm)	0.52oz (15.0g)
PL04-03		3/8" Male BSPT (R)			17mm	1.08" (27.5mm)	0.91oz (26.0g)
PL04-G01		1/2" Male BSPT (R)			14mm	0.84" (21.5mm)	0.45oz (13.0g)
PL04-G02		1/4" Male BSPP (G)			17mm	0.92" (23.5mm)	0.59oz (17.0g)
PL04-G03		3/8" Male BSPP (G)			20mm	0.90" (23.0mm)	0.77oz (22.0g)
PL04-M5		M5 x 0.8			10mm	0.80" (20.5mm)	0.21oz (6.00g)
PL04-M6		M6 x 1.0				0.81" (20.6mm)	0.28oz (8.00g)
PL06-01	6mm	1/8" Male BSPT (R)	10	Yes	12mm	1.04" (26.5mm)	0.45oz (13.0g)
PL06-02		1/4" Male BSPT (R)			14mm	1.16" (29.5mm)	0.67oz (19.0g)
PL06-03		3/8" Male BSPT (R)			17mm	1.20" (30.5mm)	0.95oz (27.0g)
PL06-04		1/2" Male BSPT (R)			21mm	1.31" (33.5mm)	1.37oz (39.0g)
PL06-G01		1/8" Male BSPP (G)			14mm	0.92" (23.5mm)	0.52oz (15.0g)
PL06-G02		1/4" Male BSPP (G)			17mm	1.00" (25.5mm)	0.63oz (18.0g)
PL06-G03		3/8" Male BSPP (G)			20mm	0.98" (25.0mm)	0.88oz (25.0g)
PL06-M5		M5 x 0.8			12mm	0.88" (22.6mm)	0.24oz (7.00g)
PL06-M6		M6 x 1.0			12mm		0.42oz (12.0g)
PL06-M12		M12 x 1.5		No	N/A	N/A	N/A
PL06-M16		M16 x 1.5					
PL08-01	8mm	1/8" Male BSPT (R)	10	Yes	14mm	1.10" (28.0mm)	0.63oz (18.0g)
PL08-02		1/4" Male BSPT (R)				1.22" (31.0mm)	0.77oz (22.0g)
PL08-03		3/8" Male BSPT (R)			17mm	1.25" (32.0mm)	0.95oz (27.0g)
PL08-04		1/2" Male BSPT (R)			21mm	1.37" (35.0mm)	1.51oz (43.0g)
PL08-G01		1/8" Male BSPP (G)			14mm	0.98" (25.0mm)	0.56oz (16.0g)
PL08-G02		1/4" Male BSPP (G)			17mm	1.06" (27.0mm)	0.74oz (21.0g)
PL08-G03		3/8" Male BSPP (G)			20mm	1.04" (26.5mm)	0.88oz (25.0g)
PL08-G04		1/2" Male BSPP (G)		No	24mm	1.10" (28.0mm)	1.30oz (37.0g)
PL08-M12		M12 x 1.5			N/A	N/A	N/A
PL08-M16		M16 x 1.5					
PL08-M22		M22 x 1.5					
PL10-01	10mm	1/8" Male BSPT (R)	10	Yes	17mm	1.12" (28.5mm)	0.91oz (26.0g)
PL10-02		1/4" Male BSPT (R)				1.24" (31.5mm)	0.98oz (28.0g)
PL10-03		3/8" Male BSPT (R)				1.27" (32.5mm)	1.05oz (30.0g)
PL10-04		1/2" Male BSPT (R)	5		21mm	1.39" (35.5mm)	1.41oz (40.0g)
PL10-G01		1/8" Male BSPP (G)	10		17mm	1.00" (25.5mm)	0.81oz (23.0g)
PL10-G02		1/4" Male BSPP (G)				1.08" (27.5mm)	0.84oz (24.0g)
PL10-G03		3/8" Male BSPP (G)			20mm	1.06" (27.0mm)	0.98oz (28.0g)
PL10-G04		1/2" Male BSPP (G)	5		24mm	1.12" (28.5mm)	1.48oz (42.0g)
PL10-M12		M12 x 1.5	10	No	N/A	N/A	N/A
PL10-M16		M16 x 1.5					
PL10-M22		M22 x 1.5	5				

Swivel Male Elbow – PL (continued)

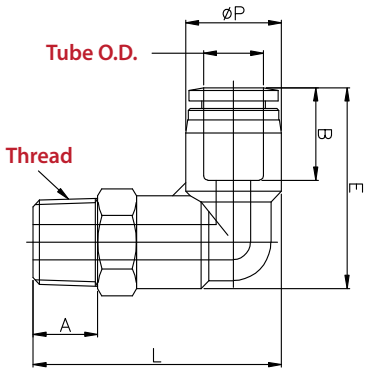

Metric Tube Sizes

Model	Tube OD	Thread	Package Qty.	Stock	Hex	Length	Weight
PL12-01	12mm	1/8" Male BSPT (R)	5	Yes	19mm	1.27" (32.4mm)	1.48oz (42.0g)
PL12-02		1/4" Male BSPT (R)				1.35" (34.4mm)	1.41oz (40.0g)
PL12-03		3/8" Male BSPT (R)				1.39" (35.4mm)	1.51oz (43.0g)
PL12-04		1/2" Male BSPT (R)			21mm	1.51" (38.4mm)	1.83oz (52.0g)
PL12-G02		1/4" Male BSPP (G)			19mm	1.19" (30.4mm)	1.26oz (36.0g)
PL12-G03		3/8" Male BSPP (G)			20mm	1.17" (29.9mm)	1.34oz (38.0g)
PL12-G04		1/2" Male BSPP (G)			24mm	1.23" (31.4mm)	1.58oz (45.0g)
PL12-M12		M12 x 1.5		No	N/A	N/A	N/A
PL12-M14		M14 x 1.5					
PL12-M16		M16 x 1.5					
PL12-M22		M22 x 1.5					
PL14-03	14mm	3/8" Male BSPT (R)	5	Yes	22mm	1.49" (38.0mm)	1.76oz (50.0g)
PL14-04		1/2" Male BSPT (R)				1.61" (41.0mm)	2.11oz (60.0g)
PL14-G03		3/8" Male BSPP (G)				1.33" (34.0mm)	1.59oz (45.0g)
PL14-G04		1/2" Male BSPP (G)		No	24mm	1.39" (35.5mm)	1.76oz (50.0g)
PL16-03	16mm	3/8" Male BSPT (R)	5	Yes	24mm	1.68" (42.8mm)	2.43oz (69.0g)
PL16-04		1/2" Male BSPT (R)				1.80" (45.8mm)	2.71oz (77.0g)
PL16-G03		3/8" Male BSPP (G)				1.54" (39.3mm)	2.32oz (66.0g)
PL16-G04		1/2" Male BSPP (G)				1.60" (40.8mm)	2.46oz (70.0g)

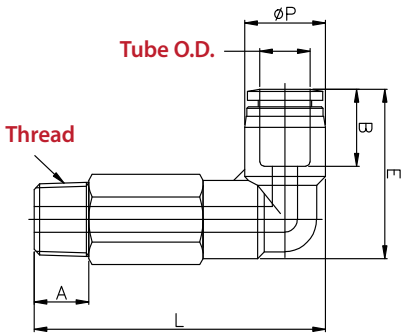

Extended Swivel Male Elbow – PLL

Extended Swivel Male Elbows are configured in a 90° extended body with an external hex for tightening. The extended body allows the fitting to reach above shorter elbows in areas of limited access.

Fractional Tube Sizes

Model	Tube OD	Thread	Package Qty.	Stock	Hex	Length	Weight
PLL5/32-U	5/32"	10-32 Male	10	Yes	7/16"	1.27" (32.5mm)	0.55oz (15.8g)
PLL5/32-N1		1/8" Male NPT				1.41" (36.0mm)	0.62oz (17.8g)
PLL5/32-N2		1/4" Male NPT			9/16"	1.47" (37.5mm)	1.12oz (31.8g)
PLL3/16-U	3/16"	10-32 Male	10	Yes	7/16"	1.33" (33.8mm)	0.55oz (15.7g)
PLL3/16-N1		1/8" Male NPT		No		1.41" (36.0mm)	0.62oz (17.7g)
PLL3/16-N2		1/4" Male NPT			9/16"	1.47" (37.5mm)	1.11oz (31.7g)
PLL3/16-N3		3/8" Male NPT			11/16"	1.53" (39.0mm)	1.41oz (39.7g)
PLL1/4-U	1/4"	10-32 Male	10	Yes	1/2"	1.47" (37.5mm)	0.99oz (27.7g)
PLL1/4-N1		1/8" Male NPT				1.61" (41.0mm)	1.02oz (28.7g)
PLL1/4-N2		1/4" Male NPT			9/16"	1.73" (44.0mm)	1.22oz (34.7g)
PLL1/4-N3		3/8" Male NPT			11/16"	1.77" (45.0mm)	1.75oz (49.7g)
PLL1/4-01		1/8" Male BSPT (R)		No	12mm	1.59" (40.5mm)	1.01oz (28.7g)
PLL1/4-02		1/4" Male BSPT (R)			14mm	1.67" (42.5mm)	1.22oz (34.7g)
PLL5/16-N1	5/16"	1/8" Male NPT	10	Yes	9/16"	1.75" (44.5mm)	1.27oz (35.7g)
PLL5/16-N2		1/4" Male NPT		No		1.83" (46.5mm)	1.40oz (39.7g)
PLL5/16-N3		3/8" Male NPT	5		11/16"	1.98" (50.5mm)	2.10oz (59.7g)
PLL5/16-01		1/8" Male BSPT (R)	10		14mm	1.73" (44.0mm)	1.26oz (35.7g)
PLL5/16-02		1/4" Male BSPT (R)				1.81" (46.0mm)	1.40oz (39.7g)
PLL3/8-N2	3/8"	1/4" Male NPT	5	Yes	11/16"	1.96" (50.0mm)	2.26oz (64.2g)
PLL3/8-N3		3/8" Male NPT				2.00" (51.0mm)	2.44oz (69.2g)
PLL3/8-N4		1/2" Male NPT			7/8"	2.12" (54.0mm)	3.49oz (99.2g)
PLL3/8-01		1/8" Male BSPT (R)		No	17mm	1.95" (49.7mm)	2.26oz (64.2g)
PLL3/8-02		1/4" Male BSPT (R)				1.99" (50.7mm)	2.44oz (69.2g)
PLL1/2-N2	1/2"	1/4" Male NPT	5	Yes	3/4"	2.26" (57.5mm)	3.13oz (89.0g)
PLL1/2-N3		3/8" Male NPT				2.30" (58.5mm)	4.19oz (119g)
PLL1/2-N4		1/2" Male NPT			7/8"	2.42" (61.5mm)	5.64oz (159g)

Technifit™ Push-to-Connect Fittings

Extended Swivel Male Elbow – PLL (continued)

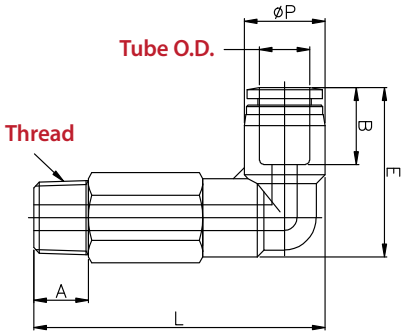

Metric Tube Sizes

Model	Tube OD	Thread	Package Qty.	Stock	Hex	Length	Weight
PLL04-01	4mm	1/8" Male BSPT (R)	10	Yes	10mm	1.39" (35.5mm)	0.56oz (16.0g)
PLL04-02		1/4" Male BSPT (R)			14mm	1.47" (37.5mm)	0.98oz (28.0g)
PLL04-03		3/8" Male BSPT (R)		No	17mm	1.51" (38.5mm)	1.37oz (39.0g)
PLL04-G01		1/8" Male BSPP (G)			14mm	1.31" (33.5mm)	0.95oz (27.0g)
PLL04-G02		1/4" Male BSPP (G)			17mm	1.39" (35.5mm)	1.41oz (40.0g)
PLL04-G03		3/8" Male BSPP (G)			20mm	1.45" (37.0mm)	1.83oz (52.0g)
PLL04-M5		M5 x 0.8			10mm	1.29" (33.0mm)	0.63oz (18.0g)
PLL04-M6		M6 x 1.0				1.30" (33.2mm)	0.63oz (16.0g)
PLL06-01	6mm	1/8" Male BSPT (R)	10	Yes	12mm	1.57" (40.0mm)	0.88oz (25.0g)
PLL06-02		1/4" Male BSPT (R)			14mm	1.65" (42.0mm)	1.16oz (33.0g)
PLL06-03		3/8" Male BSPT (R)			17mm	1.69" (43.0mm)	1.69oz (48.0g)
PLL06-04		1/2" Male BSPT (R)	5	No	21mm	1.81" (46.0mm)	3.39oz (96.0g)
PLL06-G01		1/8" Male BSPP (G)	10		14mm	1.47" (37.5mm)	1.06oz (30.0g)
PLL06-G02		1/4" Male BSPP (G)			17mm	1.55" (39.5mm)	1.55oz (44.0g)
PLL06-G03		3/8" Male BSPP (G)			20mm	1.53" (39.0mm)	1.98oz (56.0g)
PLL06-M5		M5 x 0.8		Yes	12mm	1.47" (37.5mm)	0.88oz (25.0g)
PLL06-M6		M6 x 1.0		No		1.47" (37.7mm)	0.88oz (25.0g)
PLL08-01	8mm	1/8" Male BSPT (R)	10	Yes	14mm	1.73" (44.0mm)	1.30oz (37.0g)
PLL08-02		1/4" Male BSPT (R)				1.81" (46.0mm)	1.30oz (37.0g)
PLL08-03		3/8" Male BSPT (R)	5		17mm	1.85" (47.0mm)	2.12oz (60.0g)
PLL08-04		1/2" Male BSPT (R)			22mm	1.96" (50.0mm)	3.17oz (90.0g)
PLL08-G01		1/8" Male BSPP (G)	10	No	14mm	1.61" (41.0mm)	2.08oz (59.0g)
PLL08-G02		1/4" Male BSPP (G)			17mm	1.63" (43.0mm)	2.29oz (65.0g)
PLL08-G03		3/8" Male BSPP (G)	5		20mm	1.67" (42.5mm)	2.57oz (73.0g)
PLL08-G04		1/2" Male BSPP (G)			24mm	1.73" (44.0mm)	3.59oz (102g)
PLL10-01	10mm	1/8" Male BSPT (R)	5	Yes	17mm	1.87" (47.7mm)	2.29oz (65.0g)
PLL10-02		1/4" Male BSPT (R)				1.95"(49.7mm)	2.29oz (65.0g)
PLL10-03		3/8" Male BSPT (R)				1.99" (50.7mm)	2.01oz (57.0g)
PLL10-04		1/2" Male BSPT (R)			22mm	2.08" (53.0mm)	3.53oz (100g)
PLL10-G01		1/8" Male BSPP (G)		No	17mm	1.75" (44.5mm)	2.08oz (59.0g)
PLL10-G02		1/4" Male BSPP (G)				1.83" (46.5mm)	2.29oz (65.0g)
PLL10-G03		3/8" Male BSPP (G)			20mm	1.81" (46.0mm)	2.58oz (73.0g)
PLL10-G04		1/2" Male BSPP (G)			24mm	1.87" (47.5mm)	3.60oz (102g)
PLL12-01	12mm	1/8" Male BSPT (R)	5	No	19mm	2.12" (53.9mm)	3.21oz (91.0g)
PLL12-02		1/4" Male BSPT (R)		Yes		2.20" (55.9mm)	3.17oz (90.0g)
PLL12-03		3/8" Male BSPT (R)				2.24" (56.9mm)	2.96oz (84.0g)
PLL12-04		1/2" Male BSPT (R)			22mm	2.35" (59.9mm)	4.09oz (116g)
PLL12-G02		1/4" Male BSPP (G)		No	19mm	2.06" (52.4mm)	2.93oz (83.0g)
PLL12-G03		3/8" Male BSPP (G)			20mm	2.04" (51.9mm)	2.96oz (84.0g)
PLL12-G04		1/2" Male BSPP (G)			24mm	2.10" (53.4mm)	4.16oz (118g)
PLL16-03	16mm	3/8" Male BSPT (R)	5	No	24mm	2.70" (68.8mm)	5.11oz (145g)
PLL16-04		1/2" Male BSPT (R)				2.82" (71.8mm)	
PLL16-G03		3/8" Male BSPP (G)				2.57" (65.3mm)	
PLL16-G04		1/2" Male BSPP (G)				2.62" (66.8mm)	

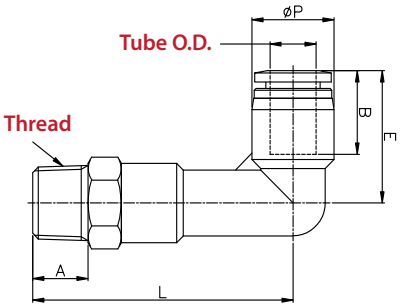

Long Swivel Male Elbow – PLLP

Long Swivel Male Elbows are configured in a 90° extra-long body with an external hex for installation. The long body allows the fitting to reach above shorter elbows in areas of limited access.

Metric Tube Sizes

Model	Tube OD	Thread	Package Qty.	Stock	Hex	Length	Weight
PLLP04-01	4mm	1/8" Male BSPT (R)	10	No	10mm	1.43" (36.5mm)	0.35oz (9.90g)
PLLP04-02		1/4" Male BSPT (R)			14mm	1.51" (38.5mm)	0.53oz (14.9g)
PLLP04-03		3/8" Male BSPT (R)			17mm	1.55" (39.5mm)	0.84oz (23.7g)
PLLP04-G01		1/8" Male BSPP (G)			14mm	1.39" (35.5mm)	0.46oz (12.9g)
PLLP04-G02		1/4" Male BSPP (G)			17mm	1.39" (35.5mm)	0.60oz (16.9g)
PLLP04-G03		3/8" Male BSPP (G)			20mm	1.37" (35.0mm)	0.70oz (19.7g)
PLLP04-M5		M5 x 0.8			10mm	1.27" (32.5mm)	0.19oz (5.60g)
PLLP04-M6		M6 x 1.0				1.27" (32.6mm)	0.28oz (8.00g)
PLLP06-01	6mm	1/8" Male BSPT (R)	10	No	12mm	1.59" (40.5mm)	0.49oz (13.8g)
PLLP06-02		1/4" Male BSPT (R)			14mm	1.71" (43.5mm)	0.67oz (18.9g)
PLLP06-03		3/8" Male BSPT (R)			17mm	1.75" (44.5mm)	0.92oz (26.1g)
PLLP06-04		1/2" Male BSPT (R)			21mm	1.87" (47.5mm)	1.42oz (40.3g)
PLLP06-G01		1/8" Male BSPP (G)			14mm	1.47" (37.5mm)	0.56oz (15.8g)
PLLP06-G02		1/4" Male BSPP (G)			17mm	1.55" (39.5mm)	0.63oz (17.9g)
PLLP06-G03		3/8" Male BSPP (G)			20mm	1.53" (39.0mm)	0.85oz (24.1g)
PLLP06-M5		M5 x 0.8			12mm	1.43" (36.5mm)	0.27oz (7.70g)
PLLP06-M6		M6 x 1.0				1.44" (36.6mm)	0.42oz (11.8g)
PLLP08-01	8mm	1/8" Male BSPT (R)	10	No	14mm	1.73" (44.0mm)	0.64oz (18.0g)
PLLP08-02		1/4" Male BSPT (R)				1.85" (47.0mm)	0.74oz (20.9g)
PLLP08-03		3/8" Male BSPT (R)	5		17mm	1.88" (48.0mm)	0.98oz (27.7g)
PLLP08-04		1/2" Male BSPT (R)			21mm	2.00" (51.0mm)	1.51oz (42.7g)
PLLP08-G01		1/8" Male BSPP (G)	10		14mm	1.61" (41.0mm)	0.56oz (16.0g)
PLLP08-G02		1/4" Male BSPP (G)			17mm	1.69" (43.0mm)	0.70oz (19.9g)
PLLP08-G03		3/8" Male BSPP (G)	5		20mm	1.67" (42.5mm)	0.91oz (25.7g)
PLLP08-G04		1/2" Male BSPP (G)			24mm	1.73" (44.0mm)	1.30oz (36.7g)
PLLP10-01	10mm	1/8" Male BSPT (R)	5	No	17mm	1.87" (47.5mm)	0.98oz (27.7g)
PLLP10-02		1/4" Male BSPT (R)				1.98" (50.5mm)	1.04oz (29.6g)
PLLP10-03		3/8" Male BSPT (R)			17mm	2.02" (51.5mm)	1.12oz (31.7g)
PLLP10-04		1/2" Male BSPT (R)			22mm	2.14" (54.5mm)	1.78oz (50.5g)
PLLP10-G01		1/8" Male BSPP (G)			17mm	1.75" (44.5mm)	0.87oz (24.7g)
PLLP10-G02		1/4" Male BSPP (G)				1.83" (46.5mm)	0.91oz (25.6g)
PLLP10-G03		3/8" Male BSPP (G)			20mm	1.81" (46.0mm)	1.05oz (29.7g)
PLLP10-G04		1/2" Male BSPP (G)			24mm	1.87" (47.5mm)	1.57oz (44.5g)
PLLP12-01	12mm	1/8" Male BSPT (R)	5	No	19mm	2.14" (54.4mm)	1.49oz (42.1g)
PLLP12-02		1/4" Male BSPT (R)				2.22" (56.4mm)	1.35oz (38.3g)
PLLP12-03		3/8" Male BSPT (R)			19mm	2.25" (57.4mm)	1.48oz (42.0g)
PLLP12-04		1/2" Male BSPT (R)			21mm	23.7" (60.4mm)	1.84oz (51.4g)
PLLP12-G02		1/4" Male BSPP (G)			19mm	2.06" (52.4mm)	1.21oz (34.3g)
PLLP12-G03		3/8" Male BSPP (G)			20mm	2.04" (51.9mm)	1.31oz (37.0g)
PLLP12-G04		1/2" Male BSPP (G)			24mm	2.10" (53.4mm)	1.57oz (44.4g)

Technifit™ Push-to-Connect Fittings

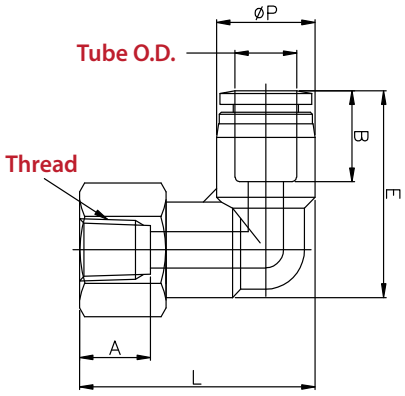

Swivel Female Elbow – PLF

Swivel Female Elbows are configured in a 90° elbow with an external hex for tightening. The swivel body enables flexibility during both installation and operation.

Fractional Tube Sizes

Model	Tube OD	Thread	Package Qty.	Stock	Hex	Length	Weight
PLF5/32-U	5/32"	10-32 Female	10	Yes	7/16"	0.84" (21.5mm)	0.28oz (7.80g)
PLF5/32-N1		1/8" Female NPT			9/16"	0.88" (22.5mm)	0.56oz (15.8g)
PLF5/32-N2		1/4" Female NPT			11/16"	0.96" (24.5mm)	0.69oz (19.8g)
PLF3/16-U	3/16"	10-32 Female	10	No	7/16"	0.84" (21.5mm)	0.28oz (7.70g)
PLF3/16-N1		1/8" Female NPT			9/16"	0.88" (22.5mm)	0.55oz (15.7g)
PLF3/16-N2		1/4" Female NPT			11/16"	0.96" (24.5mm)	0.70oz (19.7g)
PLF1/4-U	1/4"	10-32 Female	10	No	1/2"	0.82" (21.0mm)	0.42oz (11.7g)
PLF1/4-N1		1/8" Female NPT		Yes	9/16"	0.98" (25.0mm)	0.74oz (20.7g)
PLF1/4-N2		1/4" Female NPT			11/16"	1.08" (27.5mm)	0.81oz (22.7g)
PLF1/4-N3		3/8" Female NPT			7/8"	1.10" (28.0mm)	0.88oz (24.7g)
PLF5/16-N1	5/16"	1/8" Female NPT	10	No	9/16"	1.02" (26.0mm)	0.66oz (18.7g)
PLF5/16-N2		1/4" Female NPT	5		11/16"	0.98" (28.0mm)	0.92oz (25.7g)
PLF5/16-N3		3/8" Female NPT			7/8"	1.14" (29.0mm)	1.02oz (28.7g)
PLF3/8-N2	3/8"	1/4" Female NPT	5	Yes	11/16"	1.12" (28.5mm)	1.31oz (32.2g)
PLF3/8-N3		3/8" Female NPT			7/8"	1.16" (29.5mm)	1.27oz (36.2g)
PLF3/8-N4		1/2" Female NPT			15/16"	1.24" (31.5mm)	1.43oz (40.8g)
PLF1/2-N3	1/2"	3/8" Female NPT	5	Yes	7/8"	1.29" (33.0mm)	2.05oz (57.0g)
PLF1/2-N4		1/2" Female NPT			15/16"	1.37" (35.0mm)	2.64oz (75.0g)

Swivel Female Elbow – PLF (continued)

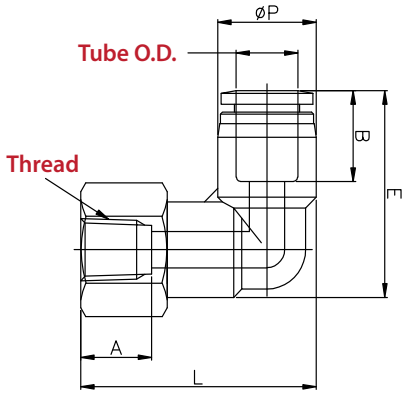

Metric Tube Sizes

Model	Tube OD	Thread	Package Qty.	Stock	Hex	Length	Weight
PLF04-01	4mm	1/8" Female BSPT (R)	10	Yes	14mm	0.88" (22.5mm)	0.53oz (15.0g)
PLF04-02		1/4" Female BSPT (R)			17mm	0.96" (24.5mm)	0.70oz (20.0g)
PLF04-G01		1/8" Female BSPP (G)		No	14mm	0.88" (22.5mm)	0.53oz (15.0g)
PLF04-G02		1/4" Female BSPP (G)			17mm	0.96" (24.5mm)	0.74oz (21.0g)
PLF04-M5		M5 x 0.8		Yes	10mm	0.84" (21.5mm)	0.35oz (10.0g)
PLF04-M6		M6 x 1.0		No			
PLF06-01	6mm	1/8" Female BSPT (R)	10	Yes	14mm	0.96" (24.5mm)	0.59oz (17.0g)
PLF06-02		1/4" Female BSPT (R)			17mm	1.04" (26.5mm)	0.81oz (23.0g)
PLF06-03		3/8" Female BSPT (R)			22mm	1.08" (27.5mm)	1.26oz (36.0g)
PLF06-04		1/2" Female BSPT (R)		No	24mm	1.16" (29.5mm)	1.30oz (37.0g)
PLF06-G01		1/8" Female BSPP (G)			17mm	0.96" (24.5mm)	0.64oz (18.0g)
PLF06-G02		1/4" Female BSPP (G)			17mm	1.04" (26.5mm)	0.81oz (23.0g)
PLF06-G03		3/8" Female BSPP (G)			22mm	1.08" (27.5mm)	1.26oz (36.0g)
PLF06-M5		M5 x 0.8		Yes	12mm	0.96" (23.5mm)	0.56oz (16.0g)
PLF06-M6		M6 x 1.0			12mm	0.92" (23.5mm)	
PLF08-01	8mm	1/8" Female BSPT (R)	10	Yes	14mm	1.02" (26.0mm)	0.67oz (19.0g)
PLF08-02		1/4" Female BSPT (R)			17mm	1.10" (28.0mm)	0.92oz (26.0g)
PLF08-03		3/8" Female BSPT (R)			22mm	1.14" (29.0mm)	1.34oz (38.0g)
PLF08-04		1/2" Female BSPT (R)	5		24mm	1.22" (31.0mm)	1.34oz (38.0g)
PLF08-G01		1/8" Female BSPP (G)	10	No	14mm	1.02" (26.0mm)	0.70oz (20.0g)
PLF08-G02		1/4" Female BSPP (G)		Yes	17mm	1.10" (28.0mm)	0.91oz (26.0g)
PLF08-G03		3/8" Female BSPP (G)		No	22mm	1.14" (29.0mm)	1.34oz (38.0g)
PLF08-G04		1/2" Female BSPP (G)	5		24mm	1.22" (31.0mm)	1.45oz (41.0g)
PLF10-01	10mm	1/8" Female BSPT (R)	5	Yes	17mm	1.12" (28.5mm)	1.02oz (29.0g)
PLF10-02		1/4" Female BSPT (R)			17mm		1.02oz (29.0g)
PLF10-03		3/8" Female BSPT (R)			22mm	1.16" (29.5mm)	1.48oz (42.0g)
PLF10-04		1/2" Female BSPT (R)			24mm	1.24" (31.5mm)	1.55oz (44.0g)
PLF10-G01		1/8" Female BSPP (G)		No	17mm	1.12" (28.5mm)	1.19oz (34.0g)
PLF10-G02		1/4" Female BSPP (G)		Yes	17mm		1.13oz (32.0g)
PLF10-G03		3/8" Female BSPP (G)			22mm	1.16" (29.5mm)	1.55oz (44.0g)
PLF10-G04		1/2" Female BSPP (G)		No	24mm	1.24" (31.5mm)	1.59oz (45.0g)
PLF12-02	12mm	1/4" Female BSPT (R)	5	Yes	19mm	1.23" (31.4mm)	1.41oz (40.0g)
PLF12-03		3/8" Female BSPT (R)			22mm	1.27" (32.4mm)	1.69oz (48.0g)
PLF12-04		1/2" Female BSPT (R)			24mm	1.34" (34.4mm)	1.72oz (49.0g)
PLF12-G02		1/4" Female BSPP (G)		No	19mm	1.23" (31.4mm)	1.41oz (40.0g)
PLF12-G03		3/8" Female BSPP (G)			22mm	1.27" (32.4mm)	1.72oz (49.0g)
PLF12-G04		1/2" Female BSPP (G)			24mm	1.35" (34.4mm)	1.79oz (51.0g)

Technifit™ Push-to-Connect Fittings

Compact Swivel Male Elbow – PL-C

Compact Swivel Male Elbows are in a 90° configuration with a small size.

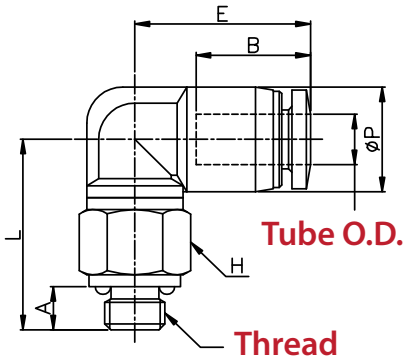

Fractional Tube Sizes

Model	Tube OD	Thread	Package Qty.	Stock	Hex	Length	Weight
PL1/8-UC	1/8"	10-32 Male	10	Yes	5/16"	0.60" (15.3mm)	0.07oz (2.00g)
PL1/8-N0C		1/16" Male NPT		No		0.62" (15.8mm)	0.11oz (3.00g)
PL1/8-N1C		1/8" Male NPT		Yes	7/16"		0.18oz (5.00g)
PL1/8-N2C		1/4" Male NPT			9/16"	0.72" (18.3mm)	0.28oz (8.00g)
PL1/8-01C		1/8" Male BSPT (R)		No	10mm	0.62" (15.8mm)	0.32oz (9.00g)
PL1/8-M3C		M3 x 0.5			8mm	0.57" (14.7mm)	0.07oz (2.00g)
PL1/8-M5C		M5 x 0.8				0.60" (15.3mm)	0.11oz (3.00g)
PL1/8-M6C		M6 x 1.0				0.62" (15.8mm)	
PL5/32-UC	5/32"	10-32 Male	10	Yes	5/16"	0.62" (15.9mm)	0.18oz (5.00g)
PL5/32-N0C		1/16" Male NPT		No		0.64" (16.4mm)	
PL5/32-N1C		1/8" Male NPT		Yes	7/16"		0.21oz (6.00g)
PL5/32-01C		1/8" Male BSPT (R)		No	10mm		0.35oz (10.0g)
PL5/32-M3C		M3 x 0.5			8mm	0.60" (15.3mm)	0.11oz (3.00g)
PL5/32-M5C		M5 x 0.8		Yes		0.62" (15.9mm)	
PL5/32-M6C		M6 x 1.0		No		0.64" (16.4mm)	0.14oz (4.00g)
PL1/4-UC	1/4"	10-32 Male	10	Yes	5/16"	0.67" (17.2mm)	0.35oz (10.0g)
PL1/4-N0C		1/16" Male NPT		No		0.69" (17.7mm)	0.42oz (12.0g)
PL1/4-N1C		1/8" Male NPT		Yes	7/16"		0.56oz (16.0g)
PL1/4-01C		1/8" Male BSPT (R)		No	10mm		
PL1/4-M5C		M5 x 0.8			8mm		0.35oz (10.0g)
PL1/4-M6C		M6 x 1.0				0.67" (17.2mm)	0.42oz (12.0g)

Metric Tube Sizes

Model	Tube OD	Thread	Package Qty.	Stock	Hex	Length	Weight
PL04-01C	4mm	1/8" Male BSPT (R)	10	No	10mm	0.64" (16.4mm)	0.25oz (7.00g)
PL04-G01		1/8" Male BSPP (G)			14mm	0.56" (14.4mm)	0.25oz (7.00g)
PL04-M3C		M3 x 0.5		Yes	8mm	0.60" (15.3mm)	0.14oz (4.00g)
PL04-M5C		M5 x 0.8				0.62" (15.9mm)	
PL04-M6C		M6 x 1.0		No		0.64" (16.4mm)	0.25oz (7.00g)
PL06-01C	6mm	1/8" Male BSPT (R)	10	Yes	10mm	0.68" (17.4mm)	0.25oz (7.00g)
PL06- G01		1/8" Male BSPP (G)		No	14mm	0.60" (15.4mm)	0.21oz (6.00g)
PL06-M5C		M5 x 0.8		Yes	8mm	0.66" (16.9mm)	0.14oz (4.00g)
PL06-M6C		M6 x 1.0		No		0.68" (17.4mm)	0.18oz (5.00g)

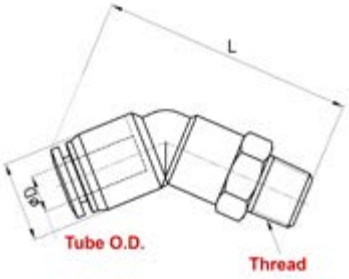

Swivel Male Hex 45 Elbow - PL45

Swivel Male Hex 45 Elbows are configured with a push-to-connect port with a male thread 45 degrees apart. The swivel body enables flexibility during both installation and operation.

Fractional Tube Sizes

Model	Tube OD	Thread	Package Qty.	Stock	Hex	Length	Weight
PL45 5/32-U	5/32"	10-32 Male	10	No	1/16"	1.38" (35.3mm)	0.27oz (7.70g)
PL45 5/32-N1		1/8" Male NPT			7/16"	1.53" (38.9mm)	0.34oz (9.70g)
PL45 5/32-N2		1/4" Male NPT			9/16"	1.64" (41.9mm)	0.58oz (16.7g)
PL45 1/4-U	1/4"	10-32 Male	10	No	1/2"	1.62" (41.3mm)	0.40oz (11.6g)
PL45 1/4-N1		1/8" Male NPT				1.70" (43.2mm)	0.51oz (14.6g)
PL45 1/4-N2		1/4" Male NPT			9/16"	1.80" (45.9mm)	0.69oz (19.6g)
PL45 1/4-N3		3/8" Male NPT	5		11/16"	1.84" (46.9mm)	1.14oz (32.6g)
PL45 1/4-01		1/8" Male BSPT (R)	10		12mm	1.66" (42.4mm)	0.51oz (14.6g)
PL45 1/4-02		1/4" Male BSPT (R)			14mm	1.78" (45.4mm)	0.69oz (19.6g)
PL45 1/4-03		3/8" Male BSPT (R)			17mm	1.82" (46.4mm)	1.14oz (32.6g)
PL45 5/16-N1	5/16"	1/8" Male NPT	10	No	9/16"	1.88" (48.0mm)	0.61oz (17.5g)
PL45 5/16-N2		1/4" Male NPT	5			1.96" (50.0mm)	0.79oz (22.5g)
PL45 5/16-N3		3/8" Male NPT			11/16"	2.00" (51.0mm)	1.25oz (35.5g)
PL45 5/16-N4		1/2" Male NPT			7/8"	2.12" (54.0mm)	1.95oz (55.5g)
PL45 5/16-01		1/8" Male BSPT (R)	10		14mm	1.79" (46.5mm)	0.61oz (17.5g)
PL45 5/16-02		1/4" Male BSPT (R)	5			1.94" (49.5mm)	0.79oz (22.5g)
PL45 5/16-03		3/8" Male BSPT (R)			17mm	1.98" (50.5mm)	1.25oz (35.5g)
PL45 3/8-N1	3/8"	1/8" Male NPT	5	No	11/16"	1.94" (49.3mm)	0.83oz (23.8g)
PL45 3/8-N2		1/4" Male NPT				2.01" (51.3mm)	0.98oz (27.8g)
PL45 3/8-N3		3/8" Male NPT				2.05" (52.3mm)	1.15oz (32.8g)
PL45 3/8-N4		1/2" Male NPT	3		7/8"	2.17" (55.3mm)	1.86oz (52.8g)
PL45 3/8-01		1/8" Male BSPT (R)	5		17mm	1.88" (47.8mm)	0.83oz (23.8g)
PL45 3/8-02		1/4" Male BSPT (R)				2.00" (50.8mm)	0.98oz (27.8g)
PL45 3/8-03		3/8" Male BSPT (R)				2.03" (51.8mm)	1.15oz (32.8g)
PL45 3/8-04		1/2" Male BSPT (R)	3		21mm	2.15" (54.8mm)	1.86oz (52.8g)
PL45 1/2-N2	1/2"	1/4" Male NPT	3	No	3/4"	2.26" (57.6mm)	1.26oz (36.0g)
PL45 1/2-N3		3/8" Male NPT				2.30" (58.6mm)	1.58oz (45.0g)
PL45 1/2-N4		1/2" Male NPT			7/8"	2.42" (61.6mm)	2.22oz (63.0g)
PL45 1/2-02		1/4" Male BSPT (R)			19mm	2.24" (57.1mm)	1.26oz (36.0g)
PL45 1/2-03		3/8" Male BSPT (R)				2.28" (58.1mm)	1.58oz (45.0g)
PL45 1/2-04		1/2" Male BSPT (R)			21mm	2.40" (61.1mm)	2.22oz (63.0g)

Swivel Male Hex 45 Elbow - PL45 (continued)

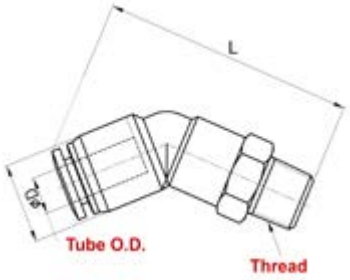

Metric Tube Sizes

Model	Tube OD	Thread	Package Qty.	Stock	Hex	Length	Weight
PL45 04-01	4mm	1/8" Male BSPT (R)	10	No	10mm	1.51" (38.4mm)	0.43oz (9.90g)
PL45 04-02		1/4" Male BSPT (R)			14mm	1.59" (40.4mm)	0.52oz (14.9g)
PL45 04-03		3/8" Male BSPT (R)	5		17mm	1.62" (41.4mm)	0.91oz (25.9g)
PL45 04-M5		M5 x 0.8	10		10mm	1.35" (34.4mm)	0.20oz (5.90g)
PL45 04-M6		M6 x 1.0				1.35" (34.5mm)	0.27oz (7.90g)
PL45 06-01	6mm	1/8" Male BSPT (R)	10	No	12mm	1.62" (41.3mm)	0.45oz (13.0g)
PL45 06-02		1/4" Male BSPT (R)			14mm	1.74" (44.3mm)	0.67oz (19.0g)
PL45 06-03		3/8" Male BSPT (R)	5		17mm	1.78" (45.3mm)	0.95oz (27.0g)
PL45 06-04		1/2" Male BSPT (R)			21mm	1.90" (48.3mm)	1.37oz (39.0g)
PL45 06-M5		M5 x 0.8	10		12mm	1.46" (37.3mm)	0.24oz (7.00g)
PL45 06-M6		M6 x 1.0				1.47" (37.4mm)	0.42oz (12.0g)
PL45 08-01	8mm	1/8" Male BSPT (R)	5	No	14mm	1.83" (46.5mm)	0.62oz (17.8g)
PL45 08-02		1/4" Male BSPT (R)				1.94" (49.5mm)	0.76oz (21.8g)
PL45 08-03		3/8" Male BSPT (R)			17mm	1.98" (50.5mm)	0.94oz (26.8g)
PL45 08-04		1/2" Male BSPT (R)			21mm	2.09" (53.5mm)	1.50oz (42.8g)
PL45 10-01	10mm	1/8" Male BSPT (R)	5	No	17mm	1.89" (48.2mm)	0.90oz (25.6g)
PL45 10-02		1/4" Male BSPT (R)				2.01" (51.2mm)	0.97oz (27.6g)
PL45 10-03		3/8" Male BSPT (R)				2.05" (52.2mm)	1.04oz (29.6g)
PL45 10-04		1/2" Male BSPT (R)	3		21mm	2.17" (55.2mm)	1.67oz (47.6g)
PL45 12-01	12mm	1/8" Male BSPT (R)	3	No	19mm	2.17" (55.3mm)	1.49oz (42.3g)
PL45 12-02		1/4" Male BSPT (R)				2.25" (57.3mm)	1.42oz (40.3g)
PL45 12-03		3/8" Male BSPT (R)				2.29" (58.3mm)	1.52oz (43.3g)
PL45 12-04		1/2" Male BSPT (R)			21mm	2.41" (61.3mm)	1.84oz (52.3g)

Compact Extended Swivel Male Elbow – PLL-C

Compact Extended Swivel Male Elbows are in a 90° configuration with a small size. The extended length allows for clearance above other fittings.

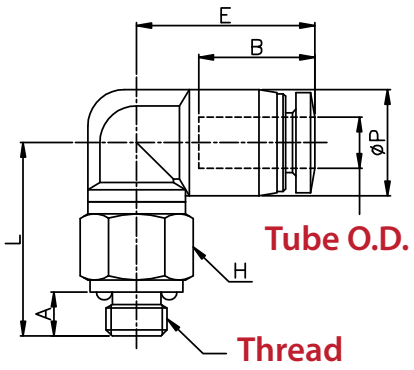

Fractional Tube Sizes

Model	Tube OD	Thread	Package Qty.	Stock	Hex	Length	Weight
PLL1/8-UC	1/8"	10-32 Male	10	Yes	5/16"	0.94" (23.9mm)	0.28oz (8.00g)
PLL1/8-N0C		1/16" Male NPT		No		0.96" (24.4mm)	0.32oz (9.00g)
PLL1/8-N1C		1/8" Male NPT			7/16"		0.39oz (11.0g)
PLL1/8-01C		1/8" Male BSPT (R)			10mm	1.13" (28.8mm)	0.42oz (12.0g)
PLL1/8-M3C		M3 x 0.5			8mm	0.85" (21.8mm)	0.11oz (3.00g)
PLL1/8-M5C		M5 x 0.8				0.94" (23.9mm)	0.28oz (8.00g)
PLL1/8-M6C		M6 x 1.0				0.96" (24.4mm)	
PLL5/32-UC	5/32"	10-32 Male	10	No	5/16"	1.00" (25.5mm)	0.28oz (8.00g)
PLL5/32-N0C		1/16" Male NPT				1.15" (29.4mm)	0.32oz (9.00g)
PLL5/32-N1C		1/8" Male NPT			7/16"	1.15"(29.4mm)	0.46oz (13.0g)
PLL5/32-01C		1/8" Male BSPT (R)			10mm	1.15" (29.4mm)	0.46oz (13.0g)
PLL5/32-M3C		M3 x 0.5			8mm	1.02" (26.0mm)	0.25oz (7.00g)
PLL5/32-M5C		M5 x 0.8				1.00" (25.5mm)	0.28oz (8.00g)
PLL5/32-M6C		M6 x 1.0				0.98" (24.9mm)	
PLL1/4-UC	1/4"	10-32 Male	10	No	5/16"	1.12" (28.7mm)	0.32oz (9.00g)
PLL1/4-N0C		1/16" Male NPT				1.28" (32.7mm)	0.39oz (11.0g)
PLL1/4-N1C		1/8" Male NPT			7/16"		0.49oz (14.0g)
PLL1/4-01C		1/8" Male BSPT (R)			10mm		0.64oz (18.0g)
PLL1/4-M5C		M5 x 0.8			8mm	1.12" (28.7mm)	0.39oz (11.0g)
PLL1/4-M6C		M6 x 1.0					0.49oz (14.0g)

Metric Tube Sizes

Model	Tube OD	Thread	Package Qty.	Stock	Hex	Length	Weight
PLL04-01C	4mm	1/8" Male BSPT (R)	10	No	10mm	1.15" (29.4mm)	0.46oz (13.0g)
PLL04-M3C		M3 x 0.5			8mm	0.98" (24.9mm)	0.28oz (8.00g)
PLL04-M5C		M5 x 0.8				1.00" (25.5mm)	
PLL04-M6C		M6 x 1.0				1.02" (26.0mm)	
PLL06-01C	6mm	1/8" Male BSPT (R)	10	No	10mm	1.27" (32.4mm)	0.49oz (14.0g)
PLL06-M5C		M5 x 0.8			8mm	1.11" (28.4mm)	0.32oz (9.00g)
PLL06-M6C		M6 x 1.0				1.13" (28.9mm)	

Resin-Series: Threaded Tee Fittings

Swivel Male Branch Tee – PT

Swivel Male Branch Tees provide two opposing push-to-connect ports with a single male threaded fitting. The male fitting swivels, and provides a hex for installation.

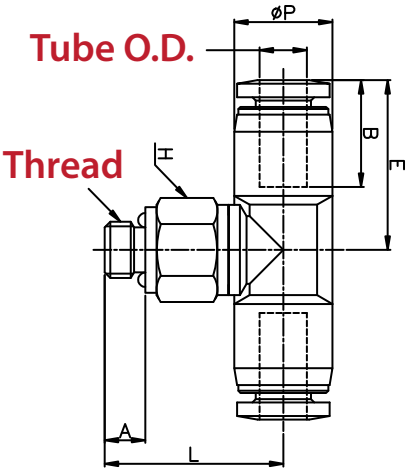

Fractional Tube Sizes

Model	Tube OD	Thread	Package Qty.	Stock	Hex	Length	Weight
PT5/32-U	5/32"	10-32 Male	10	Yes	7/16"	0.84" (21.4mm)	0.33oz (9.60g)
PT5/32-N1		1/8" Male NPT				0.98" (25.0mm)	0.41oz (11.6g)
PT5/32-N2		1/4" Male NPT			9/16"	1.10" (28.0mm)	0.56oz (15.6g)
PT3/16-U	3/16"	10-32 Male	10	Yes	7/16"	0.96" (24.4mm)	0.33oz (9.40g)
PT3/16-N1		1/8" Male NPT				0.98" (25.0mm)	0.40oz (11.4g)
PT3/16-N2		1/4" Male NPT			9/16"	1.10" (28.0mm)	0.54oz (15.4g)
PT3/16-N3		3/8" Male NPT		No	11/16"	1.14" (29.0mm)	0.68oz (19.4g)
PT1/4-U	1/4"	10-32 Male	10	Yes	1/2"	1.01" (25.9mm)	0.50oz (14.4g)
PT1/4-N1		1/8" Male NPT				1.09" (27.8mm)	0.57oz (16.4g)
PT1/4-N2		1/4" Male NPT			9/16"	1.20" (30.5mm)	0.79oz (22.4g)
PT1/4-N3		3/8" Male NPT			11/16"	1.24" (31.5mm)	1.50oz (42.4g)
PT1/4-01		1/8" Male BSPT (R)			12mm	1.06" (27.0mm)	0.57oz (16.4g)
PT1/4-02		1/4" Male BSPT (R)		No	14mm	1.18" (30.0mm)	0.79oz (22.4g)
PT1/4-03		3/8" Male BSPT (R)			17mm	1.22" (31.0mm)	1.50oz (42.4g)
PT5/16-N1	5/16"	1/8" Male NPT	10	Yes	9/16"	1.16" (29.5mm)	0.79oz (22.4g)
PT5/16-N2		1/4" Male NPT				1.24" (31.5mm)	0.93oz (26.4g)
PT5/16-N3		3/8" Male NPT	5	No	11/16"	1.27" (32.5mm)	1.07oz (30.4g)
PT5/16-N4		1/2" Male NPT			7/8"	1.39" (35.5mm)	1.77oz (50.4g)
PT5/16-01		1/8" Male BSPT (R)	10		14mm	1.10" (28.0mm)	0.79oz (22.4g)
PT5/16-02		1/4" Male BSPT (R)				1.22" (31.0mm)	0.93oz (26.4g)
PT5/16-03		3/8" Male BSPT (R)			17mm	1.25" (32.0mm)	1.07oz (30.4g)
PT3/8-N1	3/8"	1/8" Male NPT	5	Yes	11/16"	1.18" (30.0mm)	1.27oz (22.4g)
PT3/8-N2		1/4" Male NPT					0.93oz (26.4g)
PT3/8-N3		3/8" Male NPT				1.29" (33.0mm)	1.07oz (30.4g)
PT3/8-N4		1/2" Male NPT			7/8"	1.41" (36.0mm)	1.77oz (50.4g)
PT3/8-01		1/8" Male BSPT (R)	10	No	17mm	1.12" (28.5mm)	1.21oz (34.4g)
PT3/8-02		1/4" Male BSPT (R)				1.24" (31.5mm)	1.36oz (38.4g)
PT3/8-03		3/8" Male BSPT (R)				1.27" (32.5mm)	1.53oz (43.4g)
PT3/8-04		1/2" Male BSPT (R)			21mm	1.39" (35.5mm)	2.06oz (58.4g)
PT1/2-N2	1/2"	1/4" Male NPT	5	Yes	3/4"	1.39" (35.5mm)	1.58oz (45.0g)
PT1/2-N3		3/8" Male NPT				1.43" (36.5mm)	1.98oz (54.0g)
PT1/2-N4		1/2" Male NPT			7/8"	1.55" (39.5mm)	2.61oz (74.0g)
PT1/2-02		1/4" Male BSPT (R)	10	No	19mm	1.37" (35.0mm)	1.59oz (45.0g)
PT1/2-03		3/8" Male BSPT (R)				1.41" (36.0mm)	1.91oz (54.0g)
PT1/2-04		1/2" Male BSPT (R)		Yes	21mm	1.53" (39.0mm)	2.61oz (74.0g)

Swivel Male Branch Tee – PT (continued)

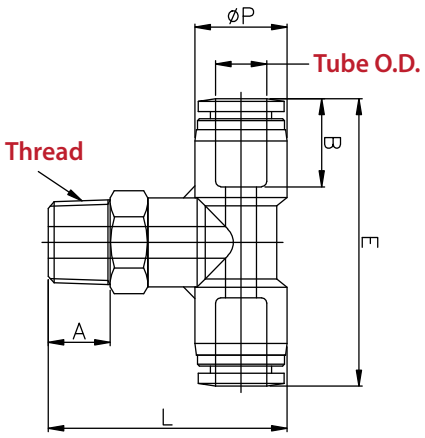

Metric Tube Sizes

Model	Tube OD	Thread	Package Qty.	Stock	Hex	Length	Weight
PT04-01	4mm	1/8" Male BSPT (R)	10	Yes	10mm	0.96" (24.5mm)	0.39oz (11.0g)
PT04-02		1/4" Male BSPT (R)			14mm	1.04" (26.5mm)	0.59oz (17.0g)
PT04-03		3/8" Male BSPT (R)			17mm	1.08" (27.5mm)	0.91oz (26.0g)
PT04-G01		1/8" Female BSPP (G)		No	14mm	0.96" (21.5mm)	0.39oz (11.0g)
PT04-G02		1/4" Female BSPP (G)			17mm	0.92" (23.5mm)	0.56oz (16.0g)
PT04-G03		3/8" Female BSPP (G)			20mm	0.90" (23.0mm)	0.81oz (23.0g)
PT04-M5		M5 x 0.8		Yes	10mm	0.80" (20.5mm)	0.35oz (10.0g)
PT04-M6		M6 x 1.0		No		0.81" (20.6mm)	
PT06-01	6mm	1/8" Male BSPT (R)	10	Yes	12mm	1.04" (26.5mm)	0.60oz (17.0g)
PT06-02		1/4" Male BSPT (R)			14mm	1.16" (29.5mm)	0.74oz (21.0g)
PT06-03		3/8" Male BSPT (R)			17mm	1.20" (30.5mm)	1.02oz (29.0g)
PT06-04		1/2" Male BSPT (R)	5	No	21mm	1.31" (33.5mm)	1.97oz (56.0g)
PT06-G01		1/8" Female BSPP (G)	10	Yes	14mm	0.92" (23.5mm)	0.59oz (17.0g)
PT06-G02		1/4" Female BSPP (G)			17mm	1.00" (25.5mm)	0.81oz (23.0g)
PT06-G03		3/8" Female BSPP (G)		No	20mm	0.98" (25.0mm)	0.91oz (26.0g)
PT06-M5		M5 x 0.8		Yes	12mm	0.88" (22.6mm)	0.53oz (15.0g)
PT06-M6		M6 x 1.0					
PT06-M12		M12 x 1.5		No	N/A	N/A	N/A
PT06-M16		M16 x 1.5					
PT08-01	8mm	1/8" Male BSPT (R)	10	Yes	14mm	1.10" (28.0mm)	0.81oz (21.0g)
PT08-02		1/4" Male BSPT (R)				1.22" (31.0mm)	0.84oz (24.0g)
PT08-03		3/8" Male BSPT (R)			17mm	1.25" (32.0mm)	1.09oz (31.0g)
PT08-04		1/2" Male BSPT (R)	5		21mm	1.37" (35.0mm)	1.90oz (54.0g)
PT08-G01		1/8" Female BSPP (G)	10		14mm	0.98" (25.0mm)	0.81oz (23.0g)
PT08-G02		1/4" Female BSPP (G)			17mm	1.06" (27.0mm)	0.95oz (27.0g)
PT08-G03		3/8" Female BSPP (G)			20mm	1.04" (26.5mm)	1.09oz (31.0g)
PT08-G04		1/2" Female BSPP (G)	5	No	24mm	1.10" (28.0mm)	1.79oz (51.0g)
PT08-M12		M12 x 1.5	10		N/A	N/A	N/A
PT08-M16		M16 x 1.5					
PT08-M22		M22 x 1.5	5				
PT10-01	10mm	1/8" Male BSPT (R)	5	Yes	17mm	1.22" (28.5mm)	1.16oz (33.0g)
PT10-02		1/4" Male BSPT (R)				1.24" (31.5mm)	1.23oz (35.0g)
PT10-03		3/8" Male BSPT (R)				1.27" (32.5mm)	1.26oz (36.0g)
PT10-04		1/2" Male BSPT (R)			21mm	1.39" (35.5mm)	2.12oz (60.0g)
PT10-G01		1/8" Female BSPP (G)			17mm	1.00" (25.5mm)	1.27oz (36.0g)
PT10-G02		1/4" Female BSPP (G)				1.08" (27.5mm)	1.41oz (40.0g)
PT10-G03		3/8" Female BSPP (G)			20mm	1.06" (27.0mm)	1.45oz (41.0g)
PT10-G04		1/2" Female BSPP (G)		No	24mm	1.12" (28.5mm)	2.12oz (60.0g)
PT10-M12		M12 x 1.5			N/A	N/A	N/A
PT10-M16		M16 x 1.5					
PT10-M22		M22 x 1.5					

Swivel Male Branch Tee – PT (continued)

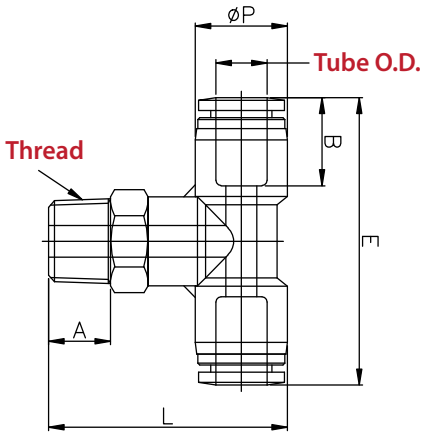

Metric Tube Sizes

Model	Tube OD	Thread	Package Qty.	Stock	Hex	Length	Weight
PT12-01	12mm	1/8" Male BSPT (R)	5	Yes	19mm	1.27" (32.4mm)	1.76oz (50.0g)
PT12-02		1/4" Male BSPT (R)				1.35" (34.4mm)	1.66oz (47.0g)
PT12-03		3/8" Male BSPT (R)				1.39" (35.4mm)	1.76oz (50.0g)
PT12-04		1/2" Male BSPT (R)			21mm	1.51" (38.4mm)	2.11oz (60.0g)
PT12-G02		1/4" Female BSPP (G)		No	19mm	1.19" (30.4mm)	1.66oz (47.0g)
PT12-G03		3/8" Female BSPP (G)		Yes	20mm	1.17" (29.9mm)	1.98oz (56.0g)
PT12-G04		1/2" Female BSPP (G)		No	24mm	1.23" (31.4mm)	2.68oz (76.0g)
PT12-M12		M12 x 1.5			N/A	N/A	N/A
PT12-M14		M14 x 1.5					
PT12-M16		M16 x 1.5					
PT12-M22		M22 x 1.5					
PT16-03	16mm	3/8" Male BSPT (R)	3	Yes	24mm	1.68" (42.8mm)	3.03oz (86.0g)
PT16-04		1/2" Male BSPT (R)				1.80" (45.8mm)	3.31oz (94.0g)
PT16-G03		3/8" Female BSPP (G)				1.60" (40.8mm)	2.72oz (77.0g)
PT16-G04		1/2" Female BSPP (G)				1.64" (41.8mm)	3.42oz (97.0g)

Resin-Series: Threaded Tee Fittings

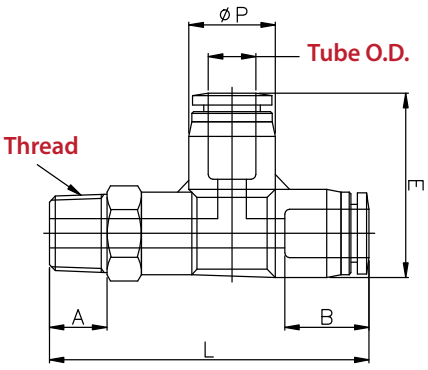

Swivel Male Run Tee – PST

Swivel Male Run Tees provide two opposing push-to-connect ports with a single male threaded fitting. The male fitting swivels, and provides a hex for installation.

Fractional Tube Sizes

Model	Tube OD	Thread	Package Qty.	Stock	Hex	Length	Weight
PST5/32-U	5/32"	10-32 Male	10	Yes	7/16"	1.64" (41.9mm)	0.33oz (9.60g)
PST5/32-N1		1/8" Male NPT				1.79" (45.5mm)	0.40oz (11.6g)
PST5/32-N2		1/4" Male NPT			9/16"	1.90" (48.5mm)	0.55oz (15.6g)
PST3/16-U	3/16"	10-32 Male	10	No	7/16"	1.63" (41.5mm)	0.33oz (9.40g)
PST3/16-N1		1/8" Male NPT		Yes		1.77" (45.1mm)	0.40oz (11.4g)
PST3/16-N2		1/4" Male NPT			9/16"	1.89" (48.1mm)	0.54oz (15.4g)
PST3/16-N3		3/8" Male NPT		No	11/16"	1.93" (49.1mm)	0.68oz (19.4g)
PST1/4-U	1/4"	10-32 Male	10	No	1/2"	1.86" (47.4mm)	0.50oz (14.4g)
PST1/4-N1		1/8" Male NPT		Yes		1.94" (49.3mm)	0.57oz (16.4g)
PST1/4-N2		1/4" Male NPT			9/16"	2.04" (52.0mm)	0.79oz (22.4g)
PST1/4-N3		3/8" Male NPT			11/16"	2.08" (53.0mm)	1.49oz (42.4g)
PST1/4-01		1/8" Male BSPT (R)		No	12mm	1.90" (48.5mm)	0.57oz (16.4g)
PST1/4-02		1/4" Male BSPT (R)			14mm	2.02" (51.5mm)	0.79oz (22.4g)
PST1/4-03		3/8" Male BSPT (R)			17mm	2.06" (52.5mm)	1.49oz (42.4g)
PST5/16-N1	5/16"	1/8" Male NPT	10	Yes	9/16"	2.11" (53.7mm)	0.79oz (22.4g)
PST5/16-N2		1/4" Male NPT		No		2.19" (55.7mm)	0.93oz (26.4g)
PST5/16-N3		3/8" Male NPT		No	11/16"	2.23" (56.7mm)	1.07oz (30.4g)
PST5/16-N4		1/2" Male NPT			7/8"	2.35" (59.8mm)	1.77oz (50.4g)
PST5/16-01		1/8" Male BSPT (R)			14mm	2.05" (52.2mm)	0.79oz (22.4g)
PST5/16-02		1/4" Male BSPT (R)				2.18" (55.5mm)	0.93oz (26.4g)
PST5/16-03		3/8" Male BSPT (R)			17mm	2.21" (56.2mm)	1.07oz (30.4g)
PST3/8-N1	3/8"	1/8" Male NPT	5	Yes	11/16"	2.25" (57.3mm)	1.21oz (34.4g)
PST3/8-N2		1/4" Male NPT				2.33" (59.3mm)	1.35oz (38.4g)
PST3/8-N3		3/8" Male NPT				2.37" (60.3mm)	1.53oz (43.4g)
PST3/8-N4		1/2" Male NPT			7/8"	2.49" (63.3mm)	2.05oz (58.4g)
PST3/8-02		1/4" Male BSPT (R)		No	17mm	2.31" (58.8mm)	1.35oz (38.4g)
PST3/8-03		3/8" Male BSPT (R)				2.35" (59.8mm)	1.53oz (43.4g)
PST3/8-04		1/2" Male BSPT (R)			21mm	2.47" (62.8mm)	2.05oz (58.4g)
PST1/2-N2	1/2"	1/4" Male NPT	5	Yes	3/4"	2.59" (65.8mm)	1.58oz (45.0g)
PST1/2-N3		3/8" Male NPT				2.62" (66.8mm)	1.90oz (54.0g)
PST1/2-N4		1/2" Male NPT			7/8"	2.74" (69.8mm)	2.61oz (74.0g)
PST1/2-02		1/4" Male BSPT (R)		No	19mm	2.57" (65.3mm)	1.58oz (45.0g)
PST1/2-03		3/8" Male BSPT (R)				2.61" (66.3mm)	1.90oz (54.0g)
PST1/2-04		1/2" Male BSPT (R)			21mm	2.72" (69.3mm)	2.61oz (74.0g)

Swivel Male Run Tee – PST (continued)

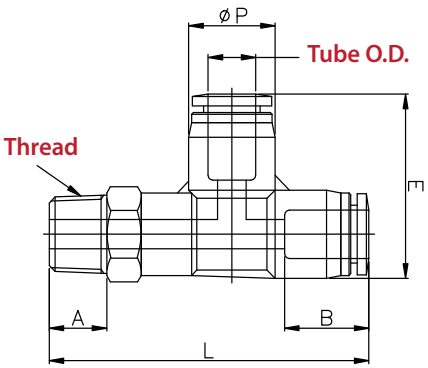

Metric Tube Sizes

Model	Tube OD	Thread	Package Qty.	Stock	Hex	Length	Weight
PST04-01	4mm	1/8" Male BSPT (R)	10	Yes	10mm	1.77" (45.0mm)	0.42oz (12.0g)
PST04-02		1/4" Male BSPT (R)			14mm	1.85" (47.0mm)	0.63oz (18.0g)
PST04-03		3/8" Male BSPT (R)			17mm	1.88" (48.0mm)	0.95oz (27.0g)
PST04-G01		1/8" Female BSPP (G)		No	14mm	1.65" (42.0mm)	0.49oz (14.0g)
PST04-G02		1/4" Female BSPP (G)			17mm	1.73" (44.0mm)	0.63oz (18.0g)
PST04-G03		3/8" Female BSPP (G)			20mm	1.71" (43.5mm)	0.84oz (24.0g)
PST04-M5		M5 x 0.8		Yes	10mm	1.61" (41.0mm)	0.35oz (10.0g)
PST04-M6		M6 x 1.0		No			
PST06-01	6mm	1/8" Male BSPT (R)	10	Yes	12mm	1.90" (48.4mm)	0.67oz (19.0g)
PST06-02		1/4" Male BSPT (R)			14mm	2.02" (51.4mm)	0.81oz (23.0g)
PST06-03		3/8" Male BSPT (R)			17mm	2.06" (52.4mm)	1.09oz (31.0g)
PST06-04		1/2" Male BSPT (R)	5	No	21mm	2.18" (55.4mm)	1.97oz (56.0g)
PST06-G01		1/8" Female BSPP (G)	10	Yes	14mm	1.78" (45.4mm)	0.63oz (18.0g)
PST06-G02		1/4" Female BSPP (G)			17mm	1.86" (47.4mm)	0.81oz (23.0g)
PST06-G03		3/8" Female BSPP (G)		No	20mm	1.84" (46.9mm)	0.95oz (27.0g)
PST06-M5		M5 x 0.8		Yes	12mm	1.74" (44.4mm)	0.53oz (15.0g)
PST06-M6		M6 x 1.0				1.75" (44.5mm)	0.53oz (15.0g)
PST06-M12		M12 x 1.5		No	N/A	N/A	N/A
PST06-M16		M16 x 1.5					
PST08-01	8mm	1/8" Male BSPT (R)	10	Yes	14mm	2.05" (52.1mm)	0.59oz (17.0g)
PST08-02		1/4" Male BSPT (R)				2.16" (55.1mm)	0.88oz (25.0g)
PST08-03		3/8" Male BSPT (R)			17mm	2.20" (56.1mm)	1.05oz (30.0g)
PST08-04		1/2" Male BSPT (R)	5		21mm	2.32" (59.1mm)	1.90oz (54.0g)
PST08-G01		1/8" Female BSPP (G)	10		14mm	1.93" (49.1mm)	0.70oz (20.0g)
PST08-G02		1/4" Female BSPP (G)			17mm	2.01" (51.1mm)	0.91oz (26.0g)
PST08-G03		3/8" Female BSPP (G)			20mm	1.99" (50.6mm)	0.98oz (28.0g)
PST08-G04		1/2" Female BSPP (G)	5	No	24mm	2.05" (52.1mm)	1.51oz (43.0g)
PST08-M12		M12 x 1.5	10		N/A	N/A	N/A
PST08-M16		M16 x 1.5					
PST08-M22		M22 x 1.5					
PST10-01	10mm	1/8" Male BSPT (R)	5	Yes	17mm	2.19" (55.8mm)	1.19oz (34.0g)
PST10-02		1/4" Male BSPT (R)				2.31" (58.8mm)	1.26oz (36.0g)
PST10-03		3/8" Male BSPT (R)				2.35" (59.8mm)	1.34oz (38.0g)
PST10-04		1/2" Male BSPT (R)			21mm	2.47" (62.8mm)	2.11oz (60.0g)
PST10-G01		1/8" Female BSPP (G)			17mm	2.07" (52.8mm)	1.09oz (31.0g)
PST10-G02		1/4" Female BSPP (G)				2.15" (54.8mm)	1.12oz (32.0g)
PST10-G03		3/8" Female BSPP (G)			20mm	2.13" (54.3mm)	1.34oz (38.0g)
PST10-G04		1/2" Female BSPP (G)		No	24mm	2.19" (55.8mm)	1.83oz (52.0g)
PST10-M12		M12 x 1.5	10		N/A	N/A	N/A
PST10-M16		M16 x 1.5					
PST10-M22		M22 x 1.5	5				

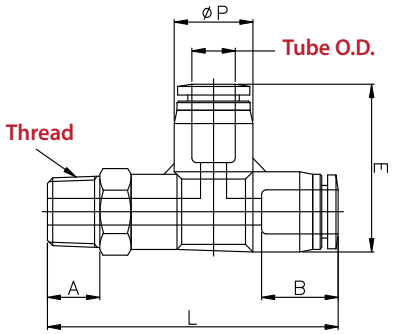

Swivel Male Run Tee – PST (continued)

Metric Tube Sizes

Model	Tube OD	Thread	Package Qty.	Stock	Hex	Length	Weight
PST12-01	12mm	1/8" Male BSPT (R)	5	No	19mm	2.48" (63.1mm)	1.79oz (51.0g)
PST12-02		1/4" Male BSPT (R)		Yes		2.56" (65.1mm)	1.76oz (50.0g)
PST12-03		3/8" Male BSPT (R)				2.60" (66.1mm)	1.83oz (52.0g)
PST12-04		1/2" Male BSPT (R)			21mm	2.72" (69.1mm)	2.32oz (66.0g)
PST12-G02		1/4" Female BSPP (G)		No	19mm	2.40" (61.1mm)	1.58oz (45.0g)
PST12-G03		3/8" Female BSPP (G)			20mm	2.38" (60.6mm)	
PST12-G04		1/2" Female BSPP (G)			24mm	2.44" (62.1mm)	2.01oz (57.0g)
PST12-M12		M12 x 1.5			N/A	N/A	N/A
PST12-M14		M14 x 1.5					
PST12-M16		M16 x 1.5					
PST12-M22		M22 x 1.5					

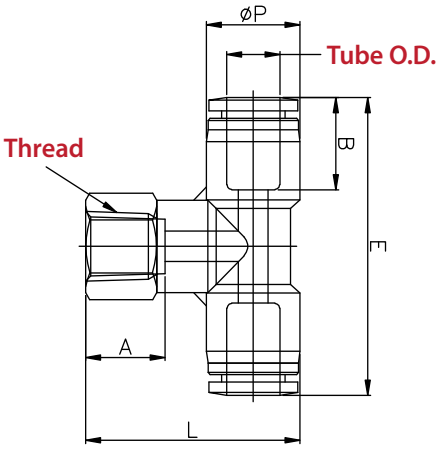

Swivel Female Branch Tee – PTF

Swivel Female Branch Tees provide two opposing push-to-connect ports with a single female threaded fitting. The female fitting swivels, and provides a hex for installation.

Fractional Tube Sizes

Model	Tube OD	Thread	Package Qty.	Stock	Hex	Length	Weight
PTF5/32-U	5/32"	10-32 Female	10	Yes	13/32"	0.84" (21.5mm)	0.41oz (11.6g)
PTF5/32-N1		1/8" Female NPT			9/16"		0.44oz (12.6g)
PTF5/32-N2		1/4" Female NPT			11/16"	0.88" (22.5mm)	0.69oz (19.6g)
PTF3/16-U	3/16"	10-32 Female	10	No	7/16"	0.84" (21.5mm)	0.40oz (11.4g)
PTF3/16-N1		1/8" Female NPT			9/16"	0.88" (22.5mm)	0.43oz (12.4g)
PTF3/16-N2		1/4" Female NPT			11/16"	0.96" (24.5mm)	0.68oz (19.4g)
PTF1/4-U	1/4"	10-32 Female	10	Yes	1/2"	0.82" (21.0mm)	0.68oz (19.4g)
PTF1/4-N1		1/8" Female NPT			9/16"	0.98" (25.0mm)	1.21oz (34.4g)
PTF1/4-N2		1/4" Female NPT			11/16"	1.08" (27.5mm)	1.31oz (37.4g)
PTF1/4-N3		3/8" Female NPT		No	7/8"	1.10" (28.0mm)	1.38oz (39.4g)
PTF5/16-N1	5/16"	1/8" Female NPT	10	Yes	9/16"	1.02" (26.0mm)	1.38oz (39.4g)
PTF5/16-N2		1/4" Female NPT	5	No	11/16"	1.10" (28.0mm)	1.49oz (42.4g)
PTF5/16-N3		3/8" Female NPT			7/8"	1.14" (29.0mm)	1.60oz (45.4g)
PTF3/8-N2	3/8"	1/4" Female NPT	5	Yes	11/16"	1.12" (28.5mm)	2.41oz (68.4g)
PTF3/8-N3		3/8" Female NPT			7/8"	1.16" (29.5mm)	2.69oz (76.4g)
PTF3/8-N4		1/2" Female NPT		No	15/16"	1.24" (31.5mm)	2.09oz (59.4g)
PTF1/2-N3	1/2"	3/8" Female NPT	5	Yes	7/8"	1.29" (33.0mm)	3.45oz (98.0g)
PTF1/2-N4		1/2" Female NPT			15/16"	1.37" (35.0mm)	4.37oz (124g)

Swivel Female Branch Tee – PTF (continued)

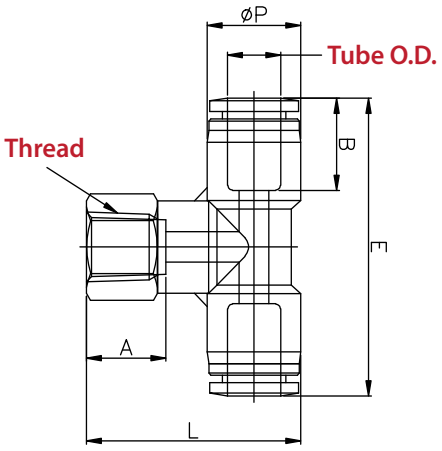

Metric Tube Sizes

Model	Tube OD	Thread	Package Qty.	Stock	Hex	Length	Weight
PTF04-01	4mm	1/8" Female BSPT (R)	10	Yes	14mm	0.84" (21.5mm)	0.42oz (12.0g)
PTF04-02		1/4" Female BSPT (R)			17mm	0.84" (21.5mm)	0.42oz (12.0g)
PTF04-G01		1/8" Female BSPP (G)		No	14mm	0.88" (22.5mm)	0.56oz (16.0g)
PTF04-G02		1/4" Female BSPP (G)			17mm	0.96" (24.5mm)	0.77oz (22.0g)
PTF04-M5		M5 x 0.8			10mm	0.88" (22.5mm)	0.35oz (10.0g)
PTF04-M6		M6 x 1.0			10mm	0.96" (24.5mm)	0.77oz (22.0g)
PTF06-01	6mm	1/8" Female BSPT (R)	10	Yes	14mm	0.96" (24.5mm)	0.70oz (20.0g)
PTF06-02		1/4" Female BSPT (R)		No	17mm	1.04" (26.5mm)	0.91oz (26.0g)
PTF06-03		3/8" Female BSPT (R)	5		22mm	1.08" (27.5mm)	1.44oz (41.0g)
PTF06-G01		1/8" Female BSPP (G)	10		14mm	0.96" (24.5mm)	0.70oz (20.0g)
PTF06-G02		1/4" Female BSPP (G)			17mm	1.04" (26.5mm)	0.84oz (24.0g)
PTF06-G03		3/8" Female BSPP (G)	5		22mm	1.08" (27.5mm)	1.37oz (39.0g)
PTF06-M5		M5 x 0.8	10		12mm	0.84" (21.5mm)	0.67oz (19.0g)
PTF06-M6		M6 x 1.0			12mm	0.84" (21.5mm)	0.63oz (18.0g)
PTF08-01	8mm	1/8" Female BSPT (R)	10	No	14mm	1.02" (26.0mm)	0.81oz (23.0g)
PTF08-02		1/4" Female BSPT (R)	5		17mm	1.10" (28.0mm)	1.09oz (31.0g)
PTF08-03		3/8" Female BSPT (R)			22mm	1.14" (29.0mm)	1.55oz (44.0g)
PTF08-04		1/2" Female BSPT (R)			24mm	1.22" (31.0mm)	1.48oz (42.0g)
PTF08-G01		1/8" Female BSPP (G)	10		14mm	1.02" (26.0mm)	0.81oz (23.0g)
PTF08-G02		1/4" Female BSPP (G)	5		17mm	1.10" (28.0mm)	0.98oz (28.0g)
PTF08-G03		3/8" Female BSPP (G)			22mm	1.14" (29.0mm)	1.51oz (43.0g)
PTF08-G04		1/2" Female BSPP (G)			24mm	1.22" (31.0mm)	1.55oz (44.0g)
PTF10-01	10mm	1/8" Female BSPT (R)	5	No	17mm	1.12" (28.5mm)	1.48oz (42.0g)
PTF10-02		1/4" Female BSPT (R)			17mm	1.12" (28.5mm)	1.30oz (37.0g)
PTF10-03		3/8" Female BSPT (R)			22mm	1.16" (29.5mm)	1.79oz (51.0g)
PTF10-04		1/2" Female BSPT (R)		Yes	24mm	1.24" (31.5mm)	1.83oz (52.0g)
PTF10-G01		1/8" Female BSPP (G)		No	17mm	1.12" (28.5mm)	1.51oz (43.0g)
PTF10-G02		1/4" Female BSPP (G)			17mm	1.12" (28.5mm)	1.23oz (35.0g)
PTF10-G03		3/8" Female BSPP (G)			22mm	1.16" (29.5mm)	1.58oz (45.0g)
PTF10-G04		1/2" Female BSPP (G)			24mm	1.24" (31.5mm)	1.62oz (46.0g)
PTF12-02	12mm	1/4" Female BSPT (R)	5	No	19mm	1.23" (31.4mm)	1.83oz (52.0g)
PTF12-03		3/8" Female BSPT (R)		Yes	22mm	1.27" (32.4mm)	2.04oz (58.0g)
PTF12-04		1/2" Female BSPT (R)		No	24mm	1.35" (34.4mm)	2.15oz (61.0g)
PTF12-G02		1/4" Female BSPP (G)			19mm	1.23" (31.4mm)	1.76oz (50.0g)
PTF12-G03		3/8" Female BSPP (G)			22mm	1.27" (32.4mm)	2.04oz (58.0g)
PTF12-G04		1/2" Female BSPP (G)			24mm	1.35" (34.4mm)	2.04oz (58.0g)

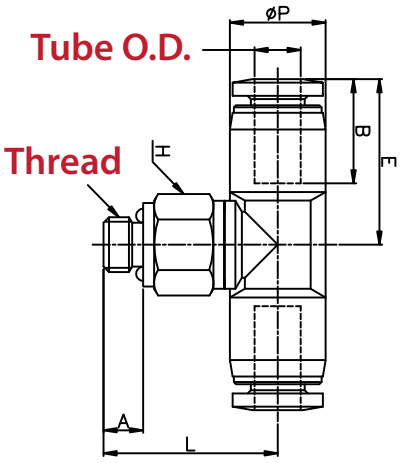

Compact Swivel Male Branch Tee – PT-C

Compact Swivel Male Branch Tees provide two opposing push-to-connect ports with a single male threaded fitting in a small package. The male fitting swivels, and provides a hex for installation.

Fractional Tube Sizes

Model	Tube OD	Thread	Package Qty.	Stock	Hex	Length	Weight
PT1/8-UC	1/8"	10-32 Male	10	Yes	5/16"	0.60" (15.3mm)	0.07oz (2.00g)
PT1/8-N0C		1/16" Male NPT		No		0.62" (15.8mm)	0.10oz (3.00g)
PT1/8-N1C		1/8" Male NPT		Yes	7/16"		0.17oz (5.00g)
PT1/8-01C		1/8" Male BSPT (R)		No	10mm		0.21oz (6.00g)
PT1/8-M3C		M3 x 0.5			8mm	0.57" (14.7mm)	0.07oz (2.00g)
PT1/8-M5C		M5 x 0.8				0.60" (15.3mm)	0.10oz (3.00g)
PT1/8-M6C		M6 x 1.0				0.62" (15.8mm)	0.14oz (4.00g)
PT5/32-UC	5/32"	10-32 Male	10	No	5/16"	0.63" (15.9mm)	0.17oz (5.00g)
PT5/32-N0C		1/16" Male NPT				0.64" (16.4mm)	
PT5/32-N1C		1/8" Male NPT			7/16"		0.21oz (6.00g)
PT5/32-01C		1/8" Male BSPT (R)			10mm		0.24oz (7.00g)
PT5/32-M3C		M3 x 0.5			8mm	0.60" (15.3mm)	0.14oz (4.00g)
PT5/32-M5C		M5 x 0.8				0.63" (15.9mm)	
PT5/32-M6C		M6 x 1.0				0.64" (16.4mm)	0.17oz (5.00g)
PT1/4-UC	1/4"	10-32 Male	10	No	5/16"	0.67" (17.2mm)	0.35oz (10.0g)
PT1/4-N0C		1/16" Male NPT				0.69" (17.7mm)	0.42oz (12.0g)
PT1/4-N1C		1/8" Male NPT		Yes	7/16"		0.56oz (16.0g)
PT1/4-01C		1/8" Male BSPT (R)		No	10mm		
PT1/4-M5C		M5 x 0.8			8mm	0.67" (17.2mm)	0.42oz (12.0g)
PT1/4-M6C		M6 x 1.0				0.69" (17.7mm)	0.35oz (10.0g)

Metric Tube Sizes

Model	Tube OD	Thread	Package Qty.	Stock	Hex	Length	Weight
PT04-01C	4mm	1/8" Male BSPT (R)	10	No	10mm	0.64" (16.4mm)	0.24oz (7.00g)
PT04-M3C		M3 x 0.5			8mm	0.60" (15.3mm)	0.17oz (5.00g)
PT04-M5C		M5 x 0.8				0.62" (15.9mm)	
PT04-M6C		M6 x 1.0		Yes		0.64" (16.4mm)	0.21oz (6.00g)
PT06-01C	6mm	1/8" Male BSPT (R)	10	No	10mm	0.68" (17.4mm)	0.31oz (9.00g)
PT06-M5C		M5 x 0.8			8mm	0.66" (16.9mm)	0.24oz (7.00g)
PT06-M6C		M6 x 1.0				0.68" (17.4mm)	

Technifit™ Push-to-Connect Fittings

Compact Swivel Male Run Tee – PST-C

Compact Swivel Male Run Tees provide two push-to-connect ports 90° apart, along with a single male threaded fitting in a small package. The male fitting swivels, and provides a hex for installation.

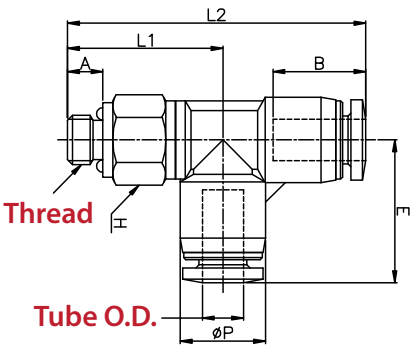

Fractional Tube Sizes

Model	Tube OD	Thread	Package Qty.	Stock	Hex	Length	Weight
PST1/8-UC	1/8"	10-32 Male	10	Yes	5/16"	1.13" (28.9mm)	0.07oz (2.00g)
PST1/8-N0C		1/16" Male NPT		No		1.15" (29.4mm)	0.10oz (3.00g)
PST1/8-N1C		1/8" Male NPT			7/16"		0.17oz (5.00g)
PST1/8-01C		1/8" Male BSPT (R)			10mm		0.21oz (6.00g)
PST1/8-M3C		M3 x 0.5			8mm	1.14" (28.3mm)	0.07oz (2.00g)
PST1/8-M5C		M5 x 0.8			8mm	1.13" (28.9mm)	0.10oz (3.00g)
PST1/8-M6C		M6 x 1.0				1.15" (29.4mm)	0.14oz (4.00g)
PST5/32-UC	5/32"	10-32 Male	10	No	5/16"	1.19" (30.4mm)	0.17oz (5.00g)
PST5/32-N0C		1/16" Male NPT				1.21" (30.9mm)	
PST5/32-N1C		1/8" Male NPT			7/16"		0.21oz (6.00g)
PST5/32-01C		1/8" Male BSPT (R)			10mm		0.24oz (7.00g)
PST5/32-M3C		M3 x 0.5			8mm	1.17" (29.8mm)	0.14oz (4.00g)
PST5/32-M5C		M5 x 0.8				1.19" (30.4mm)	0.17oz (4.00g)
PST5/32-M6C		M6 x 1.0				1.21" (30.9mm)	
PST1/4-UC	1/4"	10-32 Male	10	No	5/16"	1.37" (34.8mm)	0.35oz (10.0g)
PST1/4-N0C		1/16" Male NPT				1.38" (35.3mm)	0.42oz (12.0g)
PST1/4-N1C		1/8" Male NPT			7/16"	1.38" (35.3mm)	0.56oz (16.0g)
PST1/4-01C		1/8" Male BSPT (R)			10mm		
PST1/4-M5C		M5 x 0.8			8mm	1.37" (34.8mm)	0.35oz (10.0g)
PST1/4-M6C		M6 x 1.0				1.39" (35.3mm)	0.42oz (12.0g)

Metric Tube Sizes

Model	Tube OD	Thread	Package Qty.	Stock	Hex	Length	Weight
PST04-01C	4mm	1/8" Male BSPT (R)	10	No	10mm	1.21" (30.9mm)	0.31oz (9.00g)
PST04-M3C		M3 x 0.5		Yes	8mm	1.17" (29.8mm)	0.17oz (5.00g)
PST04-M5C		M5 x 0.8		No		1.19" (30.4mm)	0.21oz (6.00g)
PST04-M6C		M6 x 1.0				1.21" (30.9mm)	
PST06-01C	6mm	1/8" Male BSPT (R)	10	No	10mm	1.33" (33.9mm)	0.35oz (10.0g)
PST06-M5C		M5 x 0.8			8mm	1.31" (33.4mm)	0.24oz (7.00g)
PST06-M6C		M6 x 1.0				1.33" (33.9mm)	

Resin-Series: Threaded Y Fittings

Swivel Male "Y" – PWT

Swivel Male "Y" fittings provide two push-to-connect ports parallel to each other, opposing a single male thread. The male thread swivels and features a hex shape for installation.

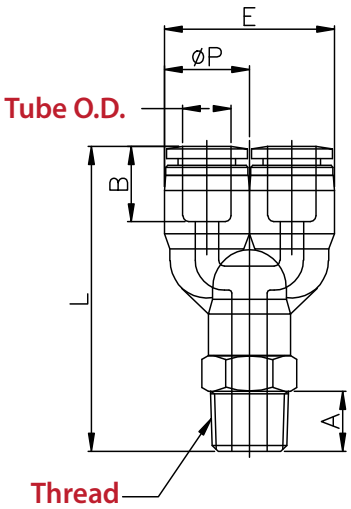

Fractional Tube Sizes

Model	Tube OD	Thread	Package Qty.	Stock	Hex	Length	Weight
PWT5/32-U	5/32"	10-32 male	10	Yes	7/16"	1.58" (40.3mm)	0.37oz (10.6g)
PWT5/32-N1		1/8" Male NPT				1.72" (43.9mm)	0.40oz (11.6g)
PWT5/32-N2		1/4" Male NPT				1.84" (46.9mm)	0.62oz (17.6g)
PWT3/16-U	3/16"	10-32 male	10	No	7/16"	1.64" (41.8mm)	0.36oz (10.4g)
PWT3/16-N1		1/8" Male NPT				1.78" (45.4mm)	0.40oz (11.4g)
PWT3/16-N2		1/4" Male NPT			9/16"	1.90" (48.4mm)	0.61oz (17.4g)
PWT3/16-N3		3/8" Male NPT			11/16"	1.94" (49.4mm)	0.68oz (19.4g)
PWT1/4-U	1/4"	10-32 Male	10	No	1/2"	1.80" (45.8mm)	0.54oz (15.4g)
PWT1/4-N1		1/8" Male NPT		Yes		1.87" (47.7mm)	0.64oz (18.4g)
PWT1/4-N2		1/4" Male NPT			9/16"	1.98" (50.4mm)	0.68oz (19.4g)
PWT1/4-N3		3/8" Male NPT			11/16"	2.02" (51.4mm)	1.10oz (31.4g)
PWT1/4-01		1/8" Male BSPT (R)			12mm	1.84" (46.9mm)	0.64oz (18.4g)
PWT1/4-02		1/4" Male BSPT (R)		No	14mm	1.96" (49.9mm)	0.68oz (19.4g)
PWT1/4-03		3/8" Male BSPT (R)			17mm	2.00" (50.9mm)	1.10oz (31.4g)
PWT5/16-N1	5/16"	1/8" Male NPT	10	No	9/16"	1.92" (49.0mm)	0.68oz (19.4g)
PWT5/16-N2		1/4" Male NPT				1.99" (50.7mm)	1.00oz (28.4g)
PWT5/16-N3		3/8" Male NPT			11/16"	2.04" (52.0mm)	1.03oz (29.4g)
PWT5/16-N4		1/2" Male NPT	5		7/8"	2.16" (55.0mm)	1.74oz (49.4g)
PWT5/16-01		1/8" Male BSPT (R)	10		14mm	1.87" (47.5mm)	0.68oz (19.4g)
PWT5/16-02		1/4" Male BSPT (R)				1.98" (50.5mm)	1.00oz (28.4g)
PWT5/16-03		3/8" Male BSPT (R)			17mm	2.02" (51.5mm)	
PWT3/8-N1	3/8"	1/8" Male NPT	5	Yes	11/16"	2.07" (52.7mm)	1.00oz (28.4g)
PWT3/8-N2		1/4" Male NPT				2.15" (54.7mm)	1.28oz (36.4g)
PWT3/8-N3		3/8" Male NPT				2.19" (55.7mm)	1.35oz (38.4g)
PWT3/8-N4		1/2" Male NPT			7/8"	2.31" (58.7mm)	2.05oz (58.4g)
PWT3/8-02		1/4" Male BSPT (R)		No	17mm	2.13" (54.2mm)	1.28oz (36.4g)
PWT3/8-03		3/8" Male BSPT (R)				2.17" (55.2mm)	1.35oz (38.4g)
PWT3/8-04		1/2" Male BSPT (R)			21mm	2.29" (58.2mm)	2.06oz (58.4g)
PWT1/2-N2	1/2"	1/4" Male NPT	5	No	3/4"	2.54" (64.6mm)	2.04oz (58.0g)
PWT1/2-N3		3/8" Male NPT		Yes		2.58" (65.6mm)	2.39oz (68.0g)
PWT1/2-N4		1/2" Male NPT			7/8"	2.70' (68.6mm)	2.75oz (78.0g)
PWT1/2-02		1/4" Male BSPT (R)		No	19mm	2.52" (64.1mm)	2.04oz (58.0g)
PWT1/2-03		3/8" Male BSPT (R)				2.56" (65.1mm)	2.39oz (68.0g)
PWT1/2-04		1/2" Male BSPT (R)			21mm	2.68" (68.1mm)	2.75oz (78.0g)

Swivel Male “Y” – PWT (continued)

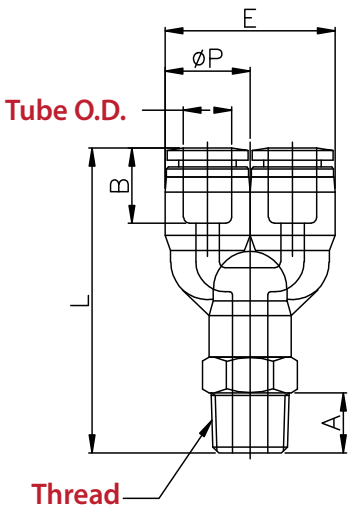

Metric Tube Sizes

Model	Tube OD	Thread	Package Qty.	Stock	Hex	Length	Weight
PWT04-01	4mm	1/8” Male BSPT (R)	5	Yes	10mm	1.70“ (43.4mm)	0.42oz (12.0g)
PWT04-02		1/4” Male BSPT (R)			14mm	1.78“ (45.4mm)	0.63oz (18.0g)
PWT04-03		3/8” Male BSPT (R)			17mm	1.82“ (46.4mm)	0.95oz (27.0g)
PWT04-G01		1/8” Female BSPP (G)		No	14mm	1.59“ (40.4mm)	0.49oz (14.0g)
PWT04-G02		1/4” Female BSPP (G)			17mm	1.66“ (42.4mm)	0.63oz (18.0g)
PWT04-G03		3/8” Female BSPP (G)			20mm	1.64“ (41.9mm)	0.81oz (23.0g)
PWT04-M5		M5 x 0.8		Yes	10mm	1.55“ (39.4mm)	0.38oz (11.0g)
PWT04-M6		M6 x 1.0		No		1.55“ (39.5mm)	
PWT06-01	6mm	1/8” Male BSPT (R)	10	Yes	12mm	1.74“ (44.4mm)	0.59oz (17.0g)
PWT06-02		1/4” Male BSPT (R)			14mm	1.86“ (47.4mm)	0.77oz (22.0g)
PWT06-03		3/8” Male BSPT (R)		No	17mm	1.90“ (48.4mm)	1.12oz (32.0g)
PWT06-04		1/2” Male BSPT (R)	5		21mm	2.02“ (51.4mm)	1.90oz (54.0g)
PWT06-G01		1/8” Female BSPP (G)	10	Yes	14mm	1.62“ (41.4mm)	0.67oz (19.0g)
PWT06-G02		1/4” Female BSPP (G)		No	17mm	1.70“ (43.4mm)	0.74oz (21.0g)
PWT06-G03		3/8” Female BSPP (G)			20mm	1.68“ (42.9mm)	0.91oz (26.0g)
PWT06-G04		1/2” Female BSPP (G)	5		24mm	1.74“ (44.4mm)	1.41oz (40.0g)
PWT06-M5		M5 x 0.8	10	Yes	12mm	1.59“ (40.5mm)	0.56oz (16.0g)
PWT06-M6		M6 x 1.0					
PWT08-01	8mm	1/8” Male BSPT (R)	10	Yes	14mm	1.86“ (47.4mm)	0.77oz (22.0g)
PWT08-02		1/4” Male BSPT (R)				1.98“ (50.4mm)	0.84oz (24.0g)
PWT08-03		3/8” Male BSPT (R)			17mm	2.02“ (51.4mm)	1.34oz (38.0g)
PWT08-04		1/2” Male BSPT (R)	5		21mm	2.14“ (54.4mm)	1.76oz (50.0g)
PWT08-G01		1/8” Female BSPP (G)	10	No	14mm	1.74“ (44.4mm)	0.70oz (20.0g)
PWT08-G02		1/4” Female BSPP (G)			17mm	1.82“ (46.4mm)	0.88oz (25.0g)
PWT08-G03		3/8” Female BSPP (G)			20mm	1.80“ (45.9mm)	1.09oz (31.0g)
PWT08-G04		1/2” Female BSPP (G)	5		24mm	1.86“ (47.4mm)	1.51oz (43.0g)
PWT10-01	10mm	1/8” Male BSPT (R)	5	Yes	17mm	2.01“ (51.3mm)	1.23oz (35.0g)
PWT10-02		1/4” Male BSPT (R)				2.13“ (54.3mm)	1.30oz (37.0g)
PWT10-03		3/8” Male BSPT (R)				2.17“ (55.3mm)	1.41oz (40.0g)
PWT10-04		1/2” Male BSPT (R)			21mm	2.29“ (58.3mm)	2.22oz (63.0g)
PWT10-G01		1/8” Female BSPP (G)		No	17mm	1.90“ (48.3mm)	1.16oz (33.0g)
PWT10-G02		1/4” Female BSPP (G)				1.98“ (50.3mm)	1.12oz (32.0g)
PWT10-G03		3/8” Female BSPP (G)			20mm	1.96“ (49.8mm)	1.34oz (38.0g)
PWT10-G04		1/2” Female BSPP (G)			24mm	2.01“ (51.3mm)	1.58oz (45.0g)
PWT12-01	12mm	1/8” Male BSPT (R)	5	No	19mm	2.25“ (57.2mm)	1.90oz (54.0g)
PWT12-02		1/4” Male BSPT (R)		Yes		2.30“ (59.2mm)	1.83oz (52.0g)
PWT12-03		3/8” Male BSPT (R)				2.37“ (60.2mm)	1.86oz (53.0g)
PWT12-04		1/2” Male BSPT (R)			21mm	2.48“ (63.2mm)	2.32oz (66.0g)
PWT12-G02		1/4” Female BSPP (G)		No	19mm	2.17“ (55.2mm)	1.65oz (47.0g)
PWT12-G03		3/8” Female BSPP (G)			20mm	2.15“ (54.7mm)	1.65oz (47.0g)
PWT12-G04		1/2” Female BSPP (G)			24mm	2.21“ (56.2mm)	2.32oz (66.0g)

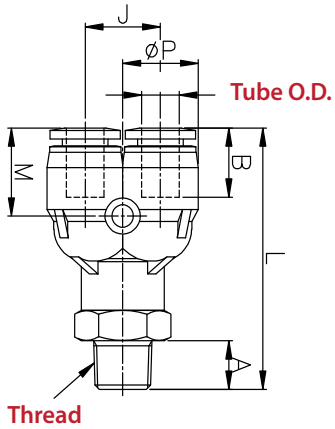

Swivel Double Male "Y" – PXT

Swivel Double Male "Y" fittings provide four push-to-connect ports parallel to each other, opposing a single male thread. The male thread swivels and features a hex shape for installation.

Metric Tube Sizes

Model	Tube OD	Thread	Package Qty.	Stock	Hex	Length	Weight
PXT04-01	4mm	1/8" Male BSPT (R)	10	No	10mm	1.64" (41.7mm)	0.67oz (19.0g)
PXT04-02		1/4" Male BSPT (R)			14mm	1.75" (44.7mm)	0.81oz (23.0g)
PXT04-G01		1/8" Female BSPP (G)				1.52" (38.7mm)	0.67oz (19.0g)
PXT04-G02		1/4" Female BSPP (G)			17mm	1.60" (40.7mm)	0.81oz (23.0g)
PXT06-01	6mm	1/8" Male BSPT (R)	5	No	12mm	1.69" (43.0mm)	0.84oz (24.0g)
PXT06-02		1/4" Male BSPT (R)			14mm	1.81" (46.0mm)	1.05oz (30.0g)
PXT06-G01		1/8" Female BSPP (G)				1.60" (40.0mm)	0.84oz (24.0g)
PXT06-G02		1/4" Female BSPP (G)			17mm	1.65" (42.0mm)	1.05oz (30.0g)

Resin-Series: Union Fittings

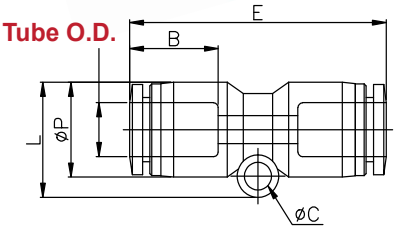

Union Straight – PUC

Union Straight Fittings provide two opposing push-to-connect ports.

Fractional Tube Sizes

Model	Tube 1 OD	Tube 2 OD	Package Qty.	Stock	Length	Weight
PUC5/32	5/32"	5/32"	10	Yes	1.33" (34.0mm)	0.12oz (3.60g)
PUC3/16	3/16"	3/16"	10	Yes	1.40" (35.6mm)	0.11oz (3.40g)
PUC1/4	1/4"	1/4"	10	Yes	1.44" (36.8mm)	0.22oz (6.40g)
PUC5/16	5/16"	5/16"	10	Yes	1.54" (39.3mm)	0.29oz (8.40g)
PUC3/8	3/8"	3/8"	10	Yes	1.67" (42.6mm)	0.47oz (13.4g)
PUC1/2	1/2"	1/2"	5	Yes	1.92" (48.9mm)	0.67oz (19.0g)

Metric Tube Sizes

Model	Tube 1 OD	Tube 2 OD	Package Qty.	Stock	Length	Weight
PUC04	4mm	4mm	10	Yes	1.33" (33.9mm)	0.14oz (4.00g)
PUC06	6mm	6mm	10	Yes	1.43" (36.4mm)	0.24oz (7.00g)
PUC08	8mm	8mm	10	Yes	1.54" (39.2mm)	0.31oz (9.00g)
PUC10	10mm	10mm	10	Yes	1.71" (43.5mm)	0.45oz (13.0g)
PUC12	12mm	12mm	5	Yes	1.90" (48.3mm)	0.70oz (20.0g)
PUC14	14mm	14mm	5	Yes	1.96" (50.0mm)	0.74oz (21.0g)
PUC16	16mm	16mm	5	Yes	2.03" (51.6mm)	1.02oz (29.0g)

Technifit™ Push-to-Connect Fittings

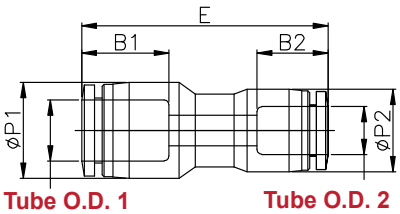

Union Straight Reducer– PG

Union Straight Reducer Fittings provide two opposing push-to-connect ports of differing sizes.

Fractional Tube Sizes

Model	Tube 1 OD	Tube 2 OD	Package Qty.	Stock	Length	Weight
PG3/16-5/32	3/16"	5/32"	10	Yes	1.37" (34.8mm)	0.19oz (5.50g)
PG1/4-5/32	1/4"	5/32"	10	Yes	1.39" (35.4mm)	0.19oz (5.40g)
PG1/4-3/16		3/16"			1.42" (36.2mm)	
PG5/16-5/32	5/16"	5/32"	10	No	1.50" (38.1mm)	0.19oz (5.50g)
PG5/16-1/4		1/4"		Yes		0.26oz (7.40g)
PG3/8-1/4	3/8"	1/4"	10	Yes	1.56" (39.7mm)	0.27oz (7.90g)
PG3/8-5/16		5/16"			1.61" (41.0mm)	0.38oz (10.9g)
PG1/2-3/8	1/2"	3/8"	5	Yes	1.78" (45.3mm)	0.57oz (16.2g)

Metric Tube Sizes

Model	Tube 1 OD	Tube 2 OD	Package Qty.	Stock	Length	Weight
PG0604	6mm	4mm	10	Yes	1.37" (35.0mm)	0.21oz (6.00g)
PG0804	8mm	4mm	10	Yes	1.50" (38.1mm)	0.24oz (7.00g)
PG0806		6mm			1.48" (37.6mm)	0.28oz (8.00g)
PG1006	10mm	6mm	10	Yes	1.57" (39.9mm)	0.23oz (9.00g)
PG1008		8mm				0.35oz (10.0g)
PG1208	12mm	8mm	10	Yes	1.79" (45.5mm)	0.45oz (13.0g)
PG1210		10mm			1.72" (43.9mm)	0.49oz (14.0g)
PG1412	14mm	12mm	5	No	1.96" (49.4mm)	0.74oz (21.0g)
PG1612	16mm	12mm	5	Yes	1.96" (49.4mm)	0.88oz (25.0g)

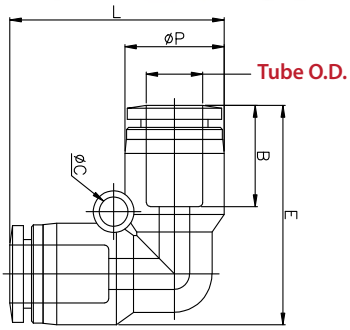

Union Elbow – PUL

Union Elbow Fittings provide two push-to-connect ports at a 90° angle.

Fractional Tube Sizes

Model	Tube 1 OD	Tube 2 OD	Package Qty.	Stock	Length	Weight
PUL5/32	5/32"	5/32"	10	Yes	0.84" (24.0mm)	0.16oz (4.60g)
PUL3/16	3/16"	3/16"	10	Yes	0.89" (25.5mm)	0.15oz (4.40g)
PUL1/4	1/4"	1/4"	10	Yes	0.98" (27.8mm)	0.26oz (7.40g)
PUL5/16	5/16"	5/16"	10	Yes	1.09" (31.1mm)	0.33oz (9.40g)
PUL3/8	3/8"	3/8"	10	Yes	1.21" (34.5mm)	0.50oz (14.4g)
PUL1/2	1/2"	1/2"	5	Yes	1.43" (40.8mm)	0.77oz (22.0g)

Metric Tube Sizes

Model	Tube 1 OD	Tube 2 OD	Package Qty.	Stock	Length	Weight
PUL04	4mm	4mm	10	Yes	0.94" (24.0mm)	0.17oz (5.00g)
PUL06	6mm	6mm	10	Yes	1.08" (27.5mm)	0.21oz (6.00g)
PUL08	8mm	8mm	10	Yes	1.22" (31.0mm)	0.31oz (9.00g)
PUL10	10mm	10mm	10	Yes	1.34" (34.1mm)	0.45oz (13.0g)
PUL12	12mm	12mm	5	Yes	1.57" (40.1mm)	0.77oz (22.0g)
PUL14	14mm	14mm	5	Yes	1.70" (43.4mm)	0.84oz (24.0g)
PUL16	16mm	16mm	5	Yes	1.85" (47.0mm)	1.26oz (36.0g)

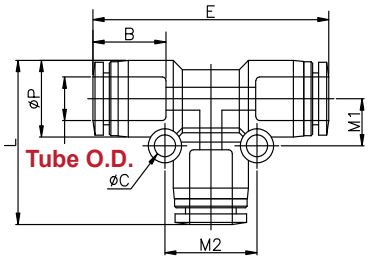

Union Tee – PUT

Union Tee Fittings provide three push-to-connect ports.

Fractional Tube Sizes

Model	Tube 1 OD	Tube 2 OD	Package Qty.	Stock	Length	Weight
PUT5/32	5/32"	5/32"	10	Yes	1.41" (36.0mm)	0.24oz (7.00g)
PUT3/16	3/16"	3/16"	10	Yes	1.55" (39.6mm)	0.21oz (6.10g)
PUT1/4	1/4"	1/4"	10	Yes	1.67" (42.6mm)	0.35oz (10.1g)
PUT5/16	5/16"	5/16"	10	Yes	1.86" (47.4mm)	0.45oz (13.0g)
PUT3/8	3/8"	3/8"	5	Yes	2.03" (51.6mm)	0.69oz (19.6g)
PUT1/2	1/2"	1/2"	5	Yes	2.38" (60.6mm)	1.09oz (31.0g)

Metric Tube Sizes

Model	Tube 1 OD	Tube 2 OD	Package Qty.	Stock	Length	Weight
PUT04	4mm	4mm	10	Yes	0.83" (21.2mm)	0.17oz (5.00g)
PUT06	6mm	6mm	10	Yes	0.98" (25.0mm)	0.21oz (6.00g)
PUT08	8mm	8mm	10	Yes	1.85" (47.2mm)	0.31oz (9.00g)
PUT10	10mm	10mm	5	Yes	2.00" (50.8mm)	0.45oz (13.0g)
PUT12	12mm	12mm	5	Yes	2.35" (59.8mm)	0.77oz (22.0g)
PUT14	14mm	14mm	5	Yes	2.51" (63.8mm)	0.84oz (24.0g)
PUT16	16mm	16mm	3	Yes	2.70" (68.8mm)	1.26oz (36.0g)

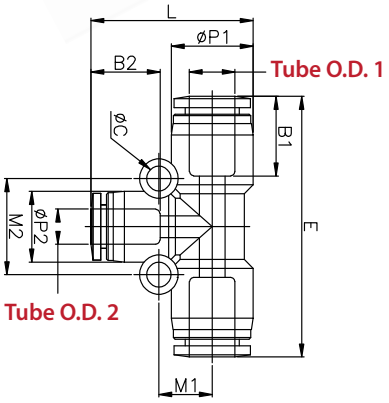

Union Reducer Tee – PGT

Union Reducer Tees provide same-size opposing push-to-connect ports, with a single reduced size port located 90° apart.

Fractional Tube Sizes

Model	Tube 1 OD	Tube 2 OD	Package Qty.	Stock	Length	Weight
PGT5/32-1/4	5/32"	1/4"	5	No	1.44" (36.6mm)	0.23oz (6.80g)
PGT1/4-5/32	1/4"	5/32"	10	Yes	1.59" (40.6mm)	0.28oz (8.20g)
PGT1/4-5/16		5/16"	5	No	0.88" (22.6mm)	0.35oz (10.1g)
PGT5/16-1/4	5/16"	1/4"	10	No	1.78" (45.4mm)	0.39oz (11.1g)
PGT5/16-3/8		3/8"	5		1.79" (45.6mm)	0.46oz (13.3g)
PGT3/8-1/4	3/8"	1/4"	10	Yes	1.91" (48.6mm)	0.60oz (17.1g)
PGT3/8-5/16		5/16"		No	1.94" (49.4mm)	0.63oz (18.1g)
PGT3/8-1/2		1/2"	5	No	1.97" (50.2mm)	0.72oz (20.6g)
PGT1/2-3/8	1/2"	3/8"	5	Yes	2.30" (58.6mm)	0.98oz (25.2g)

Metric Tube Sizes

Model	Tube 1 OD	Tube 2 OD	Package Qty.	Stock	Length	Weight
PGT0406	4mm	6mm	5	Yes	1.48" (37.6mm)	0.23oz (6.70g)
PGT0604	6mm	4mm	5	Yes	1.63" (41.6mm)	0.31oz (9.00g)
PGT0608		8mm		No	1.70" (43.2mm)	0.33oz (9.50g)
PGT0804	8mm	4mm	10	No	1.70" (43.2mm)	0.38oz (11.0g)
PGT0806		6mm		Yes	1.77" (45.2mm)	0.42oz (12.0g)
PGT0810		10mm		No	1.79" (45.6mm)	0.46oz (13.3g)
PGT1006	10mm	6mm	10	Yes	1.91"(48.6mm)	0.56oz (16.0g)
PGT1008		8mm			1.95" (49.6mm)	
PGT1012		12mm	5		1.99" (50.6mm)	0.70oz (20.1g)
PGT1208	12mm	8mm	5	Yes	2.21" (56.2mm)	0.81oz (23.0g)
PGT1210		10mm				0.77oz (25.0g)
PGT1610	16mm	10mm	3	Yes	2.42" (61.6mm)	1.44oz (41.0g)
PGT1612		12mm			2.54" (64.6mm)	1.58oz (45.0g)

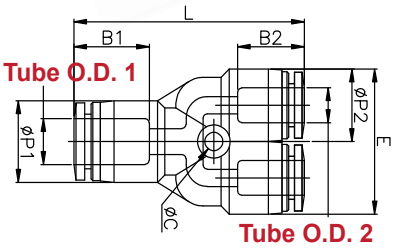

Union "Y" – PY

Union "Y" fittings provide two side by side push-to-connect ports, with an opposing push to connect port.

Fractional Tube Sizes

Model	Tube 1 OD	Tube 2 OD	Package Qty.	Stock	Length	Weight
PY5/32	5/32"	5/32"	10	Yes	1.41" (36.0mm)	0.26oz (7.40g)
PY3/16	3/16"	3/16"	10	No	1.46" (37.2mm)	0.25oz (7.10g)
PY1/4	1/4"	1/4"	10	Yes	1.56" (39.8mm)	0.32oz (9.10g)
PY5/16	5/16"	5/16"	10	Yes	1.70" (43.3mm)	0.46oz (13.1g)
PY3/8	3/8"	3/8"	5	Yes	1.85" (47.1mm)	0.67oz (19.6g)
PY1/2	1/2"	1/2"	5	Yes	2.14" (54.5mm)	1.02oz (29.0g)

Metric Tube Sizes

Model	Tube 1 OD	Tube 2 OD	Package Qty.	Stock	Length	Weight
PY04	4mm	4mm	10	Yes	1.41" (35.9mm)	0.24oz (7.00g)
PY06	6mm	6mm	10	Yes	1.54" (39.2mm)	0.35oz (10.0g)
PY08	8mm	8mm	10	Yes	1.70" (43.2mm)	0.49oz (14.0g)
PY10	10mm	10mm	5	Yes	1.85" (47.2mm)	0.70oz (20.0g)
PY12	12mm	12mm	5	Yes	2.12" (54.1mm)	1.09oz (31.0g)
PY14	14mm	14mm	5	No	2.43" (61.9mm)	1.61oz (45.9g)

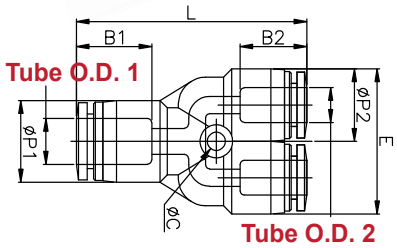

Union Reducer "Y" – PW

Union Reducer "Y" fittings provide two side by side push-to-connect ports, with an opposing larger push to connect port.

Fractional Tube Sizes

Model	Tube 1 OD	Tube 2 OD	Package Qty.	Stock	Length	Weight
PW3/16-5/32	3/16"	5/32"	10	No	1.44" (36.8mm)	0.29oz (8.30g)
PW1/4-5/32	1/4"	5/32"	10	Yes	1.49" (37.9mm)	0.29oz (8.30g)
PW1/4-3/16		3/16"		No	1.52" (38.7mm)	0.28oz (8.10g)
PW5/16-5/32	5/16"	5/32"	10	No	1.54" (39.2mm)	0.32oz (9.30g)
PW5/16-1/4		1/4"			1.65" (42.1mm)	0.42oz (12.1g)
PW3/8-1/4	3/8"	1/4"	10	Yes	1.70" (43.2mm)	0.51oz (14.6g)
PW3/8-5/16		5/16"		No	1.75" (44.5mm)	0.58oz (16.6g)
PW1/2-5/16	1/2"	5/16"	5	No	1.87" (47.6mm)	0.64oz (18.4g)
PW1/2-3/8		3/8"		Yes	2.00" (50.8mm)	0.92oz (26.2g)

Metric Tube Sizes

Model	Tube 1 OD	Tube 2 OD	Package Qty.	Stock	Length	Weight
PW0604	6mm	4mm	10	Yes	1.48" (37.6mm)	0.24oz (7.00g)
PW0804	8mm	4mm	10	No	1.53" (39.1mm)	0.31oz (9.00g)
PW0806		6mm		Yes	1.64" (41.7mm)	0.38oz (11.0g)
PW1006	10mm	6mm	10	No	1.69" (43.0mm)	0.45oz (13.0g)
PW1008		8mm		Yes	1.75" (44.5mm)	0.52oz (15.0g)
PW1208	12mm	8mm	5	No	1.86" (47.4mm)	0.70oz (20.0g)
PW1210		10mm		Yes	1.99" (50.7mm)	0.84oz (24.0g)
PW1612	16mm	12mm	5	No	2.24" (57.0mm)	1.18oz (33.6g)

Technifit™ Push-to-Connect Fittings

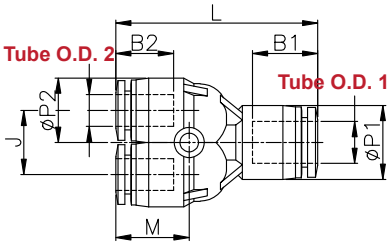

Union Reducer Double "Y" – PXG

Union Reducer "Y" fittings provide two side by side push-to-connect ports, with an opposing larger push to connect port.

Metric Tube Sizes

Model	Tube 1 OD	Tube 2 OD	Package Qty.	Stock	Length	Weight
PXG0604	6mm	4mm	10	Yes	1.40" (35.7mm)	0.45oz (13.0g)
PXG0806	8mm	6mm	5	Yes	1.57" (39.9mm)	0.63oz (18.0g)

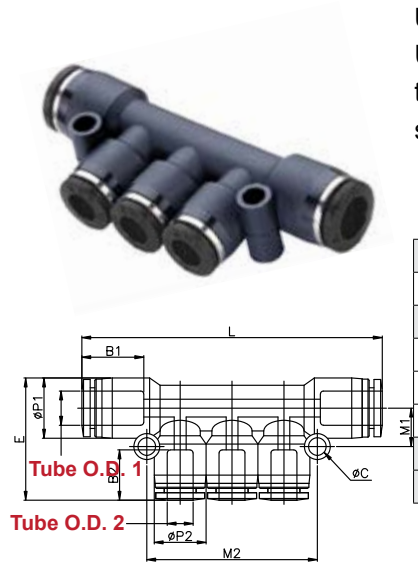

Union Reducer Triple Branch – PKG

Union Reducer Triple Branch Fittings are a great way to branch three smaller tubes off of a main line. Equipped with an inlet and outlet along with three smaller push-to-connect ports, these fittings can replace three tee's.

Fractional Tube Sizes

Model	Tube 1 OD	Tube 2 OD	Package Qty.	Stock	Length	Weight
PKG3/16-5/32	3/16"	5/32"	5	No	2.33" (60.4mm)	0.85oz (24.1g)
PKG1/4-5/32	1/4"	5/32"		Yes	2.42" (61.6mm)	0.85oz (24.1g)
PKG5/16-5/32	5/16"	5/32"	5	No	2.57" (65.6mm)	1.73oz (49.1g)
PKG5/16-3/16		3/16"			2.67" (67.9mm)	1.72oz (48.8g)
PKG5/16-1/4		1/4"			2.83" (71.9mm)	
PKG3/8-1/4	3/8"	1/4"	5	Yes	2.91" (74.2mm)	1.88oz (53.3g)
PKG3/8-5/16		5/16"		No	3.29" (83.6mm)	

Metric Tube Sizes

Model	Tube 1 OD	Tube 2 OD	Package Qty.	Stock	Length	Weight
PKG0604	6mm	4mm	5	Yes	2.48" (63.1mm)	0.49oz (14.0g)
PKG0804	8mm	4mm	5	No	2.57" (65.5mm)	0.56oz (16.0g)
PKG0806		6mm		Yes	2.81" (71.5mm)	0.67oz (19.0g)
PKG1006	10mm	6mm	5	No	3.08" (78.4mm)	0.88oz (25.0g)
PKG1008		8mm		Yes	3.29" (83.7mm)	1.02oz (29.0g)

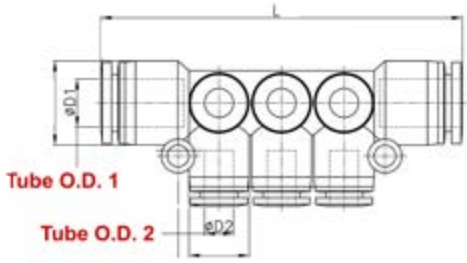

Union Six Port Branch – PMG

Union Six Port Branch Fittings are a great way to branch six smaller tubes off of a main line. Equipped with an inlet and outlet along with six smaller push-to-connect ports, these fittings can replace six tees.

Metric Tube Sizes

Model	Tube OD	Thread	Package Qty.	Stock	Length	Weight
PMG0804	8mm	4mm	5	No	2.61" (66.4mm)	0.66oz (18.9g)
PMG1006	10mm	6mm	3	No	2.95" (75.1mm)	0.99oz (28.2g)
PMG1008		8mm			3.20" (81.4mm)	1.23oz (35.0g)
PMG1208	12mm	8mm	2	No	3.44" (87.4mm)	1.43oz (40.7g)

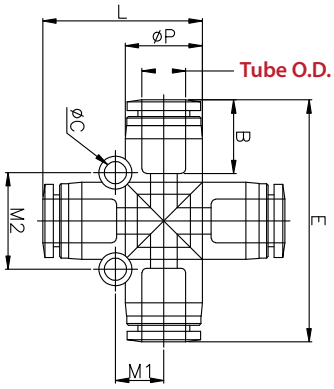

Union Cross – PZA

Union Cross Fittings provide four opposing push-to-connect ports.

Fractional Tube Sizes

Model	Tube OD	Package Qty.	Stock	Length	Weight
PZA5/32	5/32"	10	Yes	1.40" (35.6mm)	0.31oz (9.00g)
PZA3/16	3/16"	10	No	1.55" (39.6mm)	0.27oz (7.80g)
PZA1/4	1/4"	10	Yes	1.67" (42.6mm)	0.38oz (10.8g)
PZA5/16	5/16"	5	Yes	1.76" (44.8mm)	0.63oz (18.0g)
PZA3/8	3/8"	5	Yes	1.90" (48.4mm)	0.94oz (26.8g)
PZA1/2	1/2"	5	Yes	2.38" (60.5mm)	1.30oz (37.0g)

Metric Tube Sizes

Model	Tube OD	Package Qty.	Stock	Length	Weight
PZA04	4mm	10	Yes	1.39" (35.5mm)	0.31oz (9.00g)
PZA06	6mm	10	Yes	1.62" (41.4mm)	0.42oz (12.0g)
PZA08	8mm	5	Yes	1.75" (44.7mm)	0.63oz (18.0g)
PZA10	10mm	5	Yes	1.90" (48.5mm)	0.84oz (24.0g)
PZA12	12mm	5	Yes	2.17" (55.3mm)	1.41oz (40.0g)

Technifit™ Push-to-Connect Fittings

Compact Union Straight – PUC-C

Compact Union Straight Fittings provide two opposing push-to-connect ports in a small package

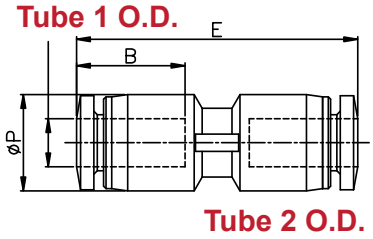

Fractional Tube Sizes

Model	Tube 1 OD	Tube 2 OD	Package Qty.	Stock	Length	Weight
PUC1/8C	1/8"	1/8"	10	Yes	0.92" (23.6mm)	0.03oz (1.00g)
PUC5/32C	5/32"	5/32"	10	Yes	0.96" (24.5mm)	0.07oz (2.00g)
PUC1/4C	1/4"	1/4"	10	Yes	1.12" (28.6mm)	0.10oz (3.00g)

Metric Tube Sizes

Model	Tube 1 OD	Tube 2 OD	Package Qty.	Stock	Length	Weight
PUC04C	4mm	4mm	10	No	0.96" (24.5mm)	0.10oz (3.00g)
PUC06C	6mm	6mm	10	Yes	1.04" (26.6mm)	0.10oz (3.00g)

Compact Union Reducer – PG-C

Compact Union Straight Reducer Fittings provide two opposing push-to-connect ports of differing sizes in a small package.

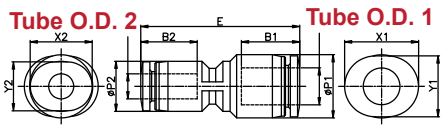

Fractional Tube Sizes

Model	Tube 1 OD	Tube 2 OD	Package Qty.	Stock	Length	Weight
PG5/32-1/8C	5/32"	1/8"	10	Yes	0.94" (24.1mm)	0.07oz (2.00g)
PG1/4-1/8C	1/4"	1/8"	10	Yes	1.05" (26.8mm)	0.10oz (3.00g)
PG1/4-5/32C		5/32"		No	1.10" (28.1mm)	

Metric Tube Sizes

Model	Tube 1 OD	Tube 2 OD	Package Qty.	Stock	Length	Weight
PG04-03C	4mm	3mm	10	No	0.94" (24.1mm)	0.10oz (3.00g)
PG06-03C	6mm	3mm	10	Yes	1.02" (26.1mm)	0.10oz (3.00g)
PG06-04C		4mm		No	1.04" (26.6mm)	

Technifit™ Push-to-Connect Fittings

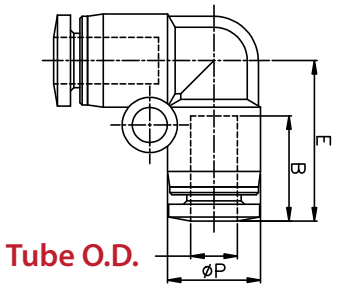

Compact Union Elbow – PUL-C

Compact Union Elbow Fittings provide two push-to-connect ports at a 90° angle in a small package.

Fractional Tube Sizes

Model	Tube 1 OD	Tube 2 OD	Package Qty.	Stock	Length	Weight
PUL1/8C	1/8"	1/8"	10	Yes	0.53" (13.5mm)	0.07oz (2.00g)
PUL5/32C	5/32"	5/32"	10	No	0.57" (14.5mm)	0.10oz (3.00g)
PUL1/4C	1/4"	1/4"	10	Yes	0.69" (17.6mm)	0.17oz (5.00g)

Metric Tube Sizes

Model	Tube 1 OD	Tube 2 OD	Package Qty.	Stock	Length	Weight
PUL04C	4mm	4mm	10	No	0.57" (14.5mm)	0.10oz (3.00g)
PUL06C	6mm	6mm	10	No	0.64" (16.5mm)	0.10oz (3.00g)

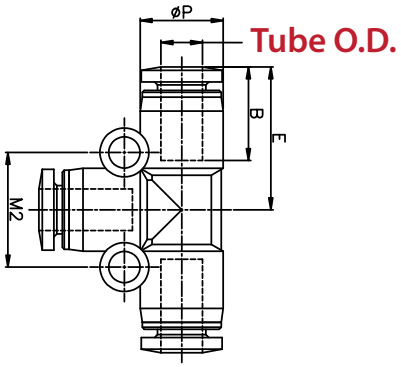

Compact Union Tee – PUT-C

Compact Union Tee Fittings provide three push-to-connect ports in a small package.

Fractional Tube Sizes

Model	Tube 1 OD	Tube 2 OD	Package Qty.	Stock	Length	Weight
PUT1/8C	1/8"	1/8"	10	Yes	0.53" (13.5mm)	0.10oz (3.00g)
PUT5/32C	5/32"	5/32"	10	Yes	0.57" (14.5mm)	0.14oz (4.00g)
PUT1/4C	1/4"	1/4"	10	No	0.69" (17.6mm)	0.21oz (6.00g)

Metric Tube Sizes

Model	Tube 1 OD	Tube 2 OD	Package Qty.	Stock	Length	Weight
PUT04C	4mm	4mm	10	No	0.57" (14.5mm)	0.10oz (3.00g)
PUT06C	6mm	6mm	10	No	0.64" (16.5mm)	0.21oz (4.00g)

Technifit™ Push-to-Connect Fittings

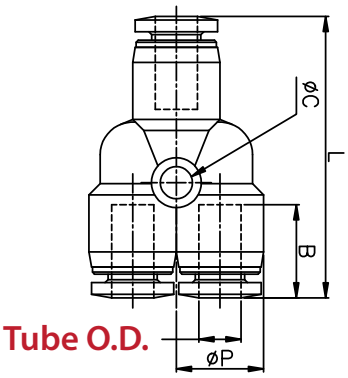

Compact Union "Y" – PY-C

Compact Union "Y" fittings provide two side by side push-to-connect ports, with an opposing push to connect port.

Fractional Tube Sizes

Model	Tube 1 OD	Tube 2 OD	Package Qty.	Stock	Length	Weight
PY1/8C	1/8"	1/8"	10	Yes	1.05" (26.8mm)	0.14oz (4.00g)
PY5/32C	5/32"	5/32"	10	Yes	1.10" (28.0mm)	0.11oz (3.00g)
PY1/4C	1/4"	1/4"	10	Yes	1.28" (32.6mm)	0.17oz (5.00g)

Metric Tube Sizes

Model	Tube 1 OD	Tube 2 OD	Package Qty.	Stock	Length	Weight
PY04C	4mm	4mm	10	No	1.10" (28.0mm)	0.17oz (5.00g)
PY06C	6mm	6mm	10	No	1.20" (30.6mm)	0.21oz (6.00g)

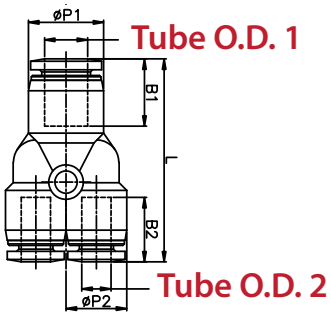

Compact Reducer Union "Y" – PW-C

Compact Union Reducer "Y" fittings provide two side by side push-to-connect ports, with an opposing larger push to connect port in a small package.

Fractional Tube Sizes

Model	Tube 1 OD	Tube 2 OD	Package Qty.	Stock	Length	Weight
PW5/32-1/8C	5/32"	1/8"	10	Yes	1.08" (27.5mm)	0.14oz (4.00g)
PW1/4-1/8C	1/4"	1/8"	10	Yes	1.15" (29.3mm)	0.17oz (5.00g)
PW1/4-5/32C		5/32"			1.17" (29.8mm)	0.17oz (5.00g)

Metric Tube Sizes

Model	Tube 1 OD	Tube 2 OD	Package Qty.	Stock	Length	Weight
PW04-03C	4mm	3mm	10	Yes	1.08" (27.5mm)	0.11oz (3.00g)
PW06-03C	6mm	3mm	10	Yes	1.12" (28.6mm)	0.14oz (4.00g)
PW06-04C		4mm		No	1.14" (29.1mm)	0.17oz (5.00g)

Resin-Series: Bulkhead Fittings

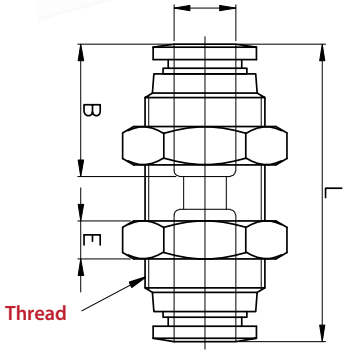

Bulkhead Union – PMM

Bulkhead Union Fittings allow for passage through a partition or panel by connecting two tubes together.

Fractional Tube Sizes

Model	Tube 1 OD	Tube 2 OD	Package Qty.	Stock	Hex	Panel Hole	Length	Weight
PMM5/32	5/32"	5/32"	10	No	14mm	0.40" (10.2mm)	1.40" (35.6mm)	0.69oz (19.6g)
PMM3/16	3/16"	3/16"	10	No	17mm	0.47" (12.0mm)	1.45" (37.0mm)	0.69oz (19.6g)
PMM1/4	1/4"	1/4"	10	No	17mm	0.47" (12.0mm)	1.53" (39.0mm)	1.04oz (29.6g)
PMM5/16	5/16"	5/16"	5	No	19mm	0.55" (14.0mm)	1.66" (42.3mm)	1.28oz (36.4g)
PMM3/8	3/8"	3/8"	5	No	24mm	0.68" (17.5mm)	1.70" (43.2mm)	2.10oz (59.8g)
PMM1/2	1/2"	1/2"	5	No	26mm	0.76" (19.5mm)	1.94" (49.5mm)	2.93oz (83.2g)

Metric Tube Sizes

Model	Tube 1 OD	Tube 2 OD	Package Qty.	Stock	Hex	Panel Hole	Length	Weight
PMM04	4mm	4mm	10	No	14mm	0.40" (10.2mm)	1.39" (35.5mm)	0.70oz (20.0g)
PMM06	6mm	6mm	10	No	17mm	0.47" (12.0mm)	1.56" (39.8mm)	1.02oz (29.0g)
PMM08	8mm	8mm	5	No	19mm	0.55" (14.0mm	1.66" (42.2mm)	1.37oz (39.0g)
PMM10	10mm	10mm	5	No	24mm	0.68" (17.5mm)	1.77" (45.1mm)	2.32oz (66.0g)
PMM12	12mm	12mm	5	No	26mm	0.76" (19.5mm)	1.97" (50.2mm)	2.92oz (83.0g)
PMM16	16mm	16mm	3	No	32mm	0.94" (24.0mm)	2.09" (53.1mm)	4.76oz (135g)

Technifit™ Push-to-Connect Fittings

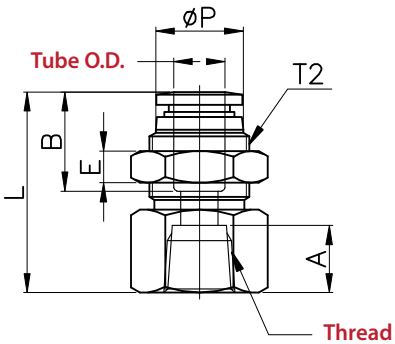

Bulkhead Female Union – PMF

Bulkhead Female Union Fittings allow for passage through a partition or panel. Each fitting contains a female thread opposed to a push-to-connect port.

Fractional Tube Sizes

Model	Tube OD	Thread	Package Qty.	Stock	Hex	Panel Hole	Length	Weight
PMF5/32-N1	5/32"	1/8" Female NPT	10	Yes	9/16"	0.41" (10.5mm)	1.06" (27.1mm)	0.69oz (19.8g)
PMF3/16-N1	3/16"	1/8" Female NPT	10	No	11/16"	0.41" (10.5mm)	1.19" (30.3mm)	0.69oz (19.8g)
PMF3/16-N2		1/4" Female NPT						0.87oz (24.8g)
PMF1/4-N1	1/4"	1/8" Female NPT	10	Yes	11/16"	0.49" (12.5mm)	1.22" (31.0mm)	1.19oz (33.8g)
PMF1/4-N2		1/4" Female NPT						0.98oz (27.8g)
PMF5/16-N1	5/16"	1/8" Female NPT	5	No	3/4"	0.59" (15.0mm)	1.24" (31.5mm)	1.54oz (43.7g)
PMF5/16-N2		1/4" Female NPT						1.36oz (38.7g)
PMF5/16-N3		3/8" Female NPT	10	Yes	7/8"		1.27" (32.5mm)	1.61oz (45.7g)
PMF3/8-N2	3/8"	1/4" Female NPT	5	Yes	15/16"	0.74" (19.0mm)	1.40" (35.6mm)	2.51oz (71.4g)
PMF3/8-N3		3/8" Female NPT						2.27oz (64.4g)
PMF1/2-N2	1/2"	1/4" Female NPT	5	Yes	15/16"	0.82" (21.0mm)	1.57" (39.9mm)	2.75oz (78.1g)
PMF1/2-N3		3/8" Female NPT						3.10oz (88.1g)
PMF1/2-N4		1/2" Female NPT						2.40oz (68.1g)

Metric Tube Sizes

Model	Tube OD	Thread	Package Qty.	Stock	Hex	Panel Hole	Length	Weight
PMF04-01	4mm	1/8" Female BSPT (R)	10	Yes	14mm	0.41" (10.5mm)	1.06" (27.1mm)	0.70oz (20.0g)
PMF04-02		1/4" Female BSPT (R)			17mm		1.14" (29.1mm)	0.88oz (25.0g)
PMF04-03		3/8" Female BSPT (R)			22mm		1.18" (30.1mm)	1.34oz (38.0g)
PMF06-01	6mm	1/8" Female BSPT (R)	10	Yes	17mm	0.49" (12.5mm)	1.18" (30.2mm)	1.19oz (34.0g)
PMF06-02		1/4" Female BSPT (R)						0.98oz (28.0g)
PMF06-03		3/8" Female BSPT (R)			22mm		1.22" (31.2mm)	1.51oz (43.0g)
PMF08-01	8mm	1/8" Female BSPT (R)	10	Yes	19mm	0.59" (15.0mm)	1.23" (31.4mm)	1.58oz (45.0g)
PMF08-02		1/4" Female BSPT (R)						1.41oz (40.0g)
PMF08-03		3/8" Female BSPT (R)			22mm		1.27" (32.4mm)	1.62oz (46.0g)
PMF08-04		1/2" Female BSPT (R)	5		24mm		1.35" (34.4mm)	1.76oz (50.0g)
PMF10-01	10mm	1/8" Female BSPT (R)	10	Yes	24mm	0.74" (19.0mm)	1.32" (33.6mm)	2.71oz (77.0g)
PMF10-02		1/4" Female BSPT (R)						2.50oz (71.0g)
PMF10-03		3/8" Female BSPT (R)	5					2.32oz (66.0g)
PMF10-04		1/2" Female BSPT (R)					1.40" (35.6mm)	2.04oz (58.0g)
PMF12-02	12mm	1/8" Female BSPT (R)	5	Yes	24mm	0.82" (21.0mm)	1.50" (38.3mm)	2.99oz (85.0g)
PMF12-03		3/8" Female BSPT (R)						2.68oz (76.0g)
PMF12-04		1/2" Female BSPT (R)					1.58" (40.3mm)	2.46oz (70.0g)

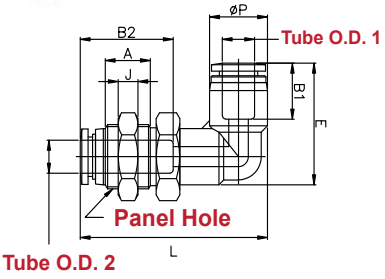

Bulkhead Union Elbow – PLM

Bulkhead Union Elbows allow for passage through a partition or panel. These fittings are configured with two push-to-connect ports set 90° apart.

Fractional Tube Sizes

Model	Tube 1 OD	Tube 2 OD	Package Qty.	Stock	Hex	Length	Weight
PLM5/32	5/32"	5/32"	10	No	14mm	1.48" (37.7mm)	0.44oz (12.6g)
PLM3/16	3/16"	3/16"	10	No	17mm	1.57" (40.0mm)	0.47oz (13.5g)
PLM1/4	1/4"	1/4"	10	No	17mm	1.78" (45.4mm)	0.54oz (15.5g)
PLM5/16	5/16"	5/16"	10	No	19mm	1.88" (47.9mm)	0.71oz (20.4g)
PLM3/8	3/8"	3/8"	5	No	24mm	2.00" (50.9mm)	1.00oz (28.6g)
PLM1/2	1/2"	1/2"	5	No	26mm	2.33" (59.4mm)	1.66oz (47.1g)

Metric Tube Sizes

Model	Tube 1 OD	Tube 2 OD	Package Qty.	Stock	Hex	Length	Weight
PLM04	4mm	4mm	10	Yes	14mm	1.48" (37.7mm)	0.67oz (19.0g)
PLM06	6mm	6mm	10	Yes	17mm	1.74" (44.4mm)	1.09oz (31.0g)
PLM08	8mm	8mm	10	Yes	19mm	1.88" (47.8mm)	1.37oz (39.0g)
PLM10	10mm	10mm	10	Yes	24mm	1.99" (50.6mm)	2.01oz (57.0g)
PLM12	12mm	12mm	10	Yes	26mm	2.29" (58.3mm)	2.79oz (79.0g)

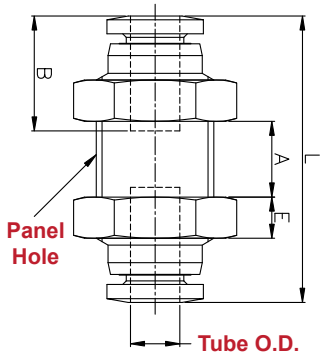

Compact Bulkhead Union – PMM-C

Compact Bulkhead Union Fittings allow for passage through a partition or panel by connecting two tubes together in a small package.

Metric Tube Sizes

Model	Tube 1 OD	Tube 2 OD	Package Qty.	Stock	Hex	Panel Hole	Length	Weight
PMM-04C	4mm	4mm	10	No	12mm	0.35" (9.00mm)	0.95" (24.3mm)	0.35oz (10.0g)
PMM-06C	6mm	6mm	10	No	14mm	0.43" (11.0mm)	1.05" (26.9mm)	0.49oz (14.0g)

Resin-Series: Plug-In Fittings

Plug-In Reducer – PGJ

Plug-in Reducers offer a push-to-connect port opposing an insert stem of differing sizes.

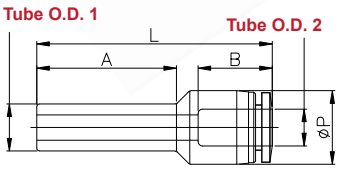

Fractional Tube Sizes

Model	Tube 1 OD	Tube 2 OD	Package Qty.	Stock	Length	Weight
PGJ1/8-1/4	1/8"	1/4"	10	Yes	1.48" (37.8mm)	0.09oz (2.70g)
PGJ5/32-1/8	5/32"	1/8"	10	No	1.25" (31.8mm)	0.10oz (3.00g)
PGJ5/32-1/4		1/4"		Yes	1.48" (37.8mm)	0.09oz (2.70g)
PGJ1/4-5/32	1/4"	5/32"	10	Yes	1.58" (40.2mm)	0.13oz (3.80g)
PGJ5/16-5/32	5/16"	5/32"	10	Yes	1.56" (39.7mm)	0.17oz (4.80g)
PGJ5/16-1/4		1/4"			1.88" (48.0mm)	0.16oz (4.70g)
PGJ3/8-1/4	3/8"	1/4"	10	Yes	1.88" (48.0mm)	0.17oz (4.70g)
PGJ3/8-5/16		5/16"			1.75" (44.7mm)	0.20oz (5.70g)
PGJ1/2-1/4	1/2"	1/4"	10	Yes	1.90" (48.5mm)	0.20oz (5.70g)
PGJ1/2-5/16		5/16"				0.23oz (6.70g)
PGJ1/2-3/8		3/8"			2.03" (51.8mm)	0.21oz (6.20g)

Metric Tube Sizes

Model	Tube 1 OD	Tube 2 OD	Package Qty.	Stock	Length	Weight
PGJ06-04	6mm	4mm	10	Yes	1.48" (37.7mm)	0.11oz (3.00g)
PGJ08-04	8mm	4mm	10	Yes	1.56" (39.7mm)	0.14oz (4.00g)
PGJ08-06		6mm			1.57" (40.0mm)	0.17oz (5.00g)
PGJ10-06	10mm	6mm	10	Yes	1.57" (44.0mm)	0.21oz (6.00g)
PGJ10-08		8mm			1.82" (46.4mm)	0.24oz (7.00g)
PGJ12-06	12mm	6mm	10	No	1.96" (50.0mm)	0.21oz (6.00g)
PGJ12-08		8mm			1.98" (50.4mm)	0.24oz (7.00g)
PGJ12-10		10mm			2.08" (52.9mm)	0.28oz (8.00g)
PGJ16-12	16mm	12mm	10	Yes	N/A	N/A

Compact Plug-In Reducer – PGJ-C

Compact Plug-in Reducers offer a push-to-connect port and an insert stem of differing sizes in a small package.

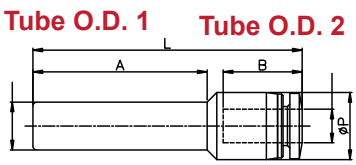

Fractional Tube Sizes

Model	Tube 1 OD	Tube 2 OD	Package Qty.	Stock	Length	Weight
PGJ5/32-1/8C	5/32"	1/8"	10	Yes	1.19" (30.4mm)	0.03oz (1.00g)
PGJ1/4-1/8C	1/4"	1/8"	10	Yes	0.85" (21.8mm)	0.07oz (2.00g)
PGJ1/4-5/32C		5/32"		No		0.10oz (3.00g)

Metric Tube Sizes

Model	Tube 1 OD	Tube 2 OD	Package Qty.	Stock	Length	Weight
PGJ04-03C	4mm	3mm	10	No	1.19" (30.4mm)	0.03oz (1.00g)
PGJ06-03C	6mm	3mm	10	No	1.25" (32.0mm)	0.07oz (2.00g)
PGJ06-04C		4mm			1.32" (33.7mm)	0.10oz (3.00g)

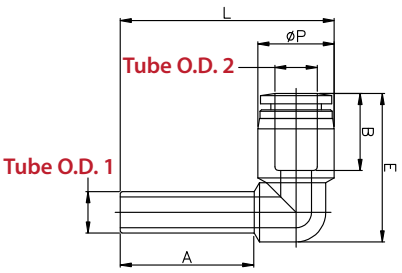

Plug-In Elbow (Reducers Included) – PLJ

Plug-in Elbows offer a push-to-connect port and an insert stem at a 90° angle.

Fractional Tube Sizes

Model	Tube 1 OD	Tube 2 OD	Package Qty.	Stock	Length	Weight
PLJ5/32	5/32"	5/32"	10	Yes	0.88" (22.5mm)	0.17oz (4.80g)
PLJ3/16	3/16"	3/16"	10	No	1.39" (35.5mm)	0.16oz (4.70g)
PLJ1/4	1/4"	1/4"	10	Yes	1.24" (31.5mm)	0.23oz (6.70g)
PLJ1/4-5/32		5/32"		No	1.39" (35.5mm)	0.20oz (5.80g)
PLJ5/16	5/16"	5/16"	10	Yes	1.60" (40.8mm)	0.27oz (7.70g)
PLJ5/16-1/4		1/4"		No	1.53" (39.0mm)	0.27oz (7.70g)
PLJ3/8	3/8"	3/8"	10	Yes	1.79" (45.5mm)	0.50oz (14.2g)
PLJ3/8-1/4		1/4"		No	1.61" (41.0mm)	0.51oz (14.7g)
PLJ3/8-5/16		5/16"			1.68" (42.8mm)	0.55oz (15.7g)
PLJ1/2	1/2"	1/2"	5	Yes	2.00" (51.0mm)	0.67oz (19.0g)
PLJ1/2-1/4		1/4"			N/A	N/A

Metric Tube Sizes

Model	Tube 1 OD	Tube 2 OD	Package Qty.	Stock	Length	Weight
PLJ04	4mm	4mm	10	No	1.27" (32.5mm)	0.14oz (4.00g)
PLJ06	6mm	6mm	10	Yes	1.43" (36.5mm)	0.31oz (9.00g)
PLJ0604		4mm		No	1.39" (35.5mm)	0.21oz (6.00g)
PLJ08	8mm	8mm	10	No	1.37" (34.8mm)	0.28oz (8.00g)
PLJ0806		6mm			1.51" (38.5mm)	
PLJ10	10mm	10mm	10	Yes	1.79" (45.5mm)	0.35oz (10.0g)
PLJ1008		8mm		No	1.68" (42.8mm)	0.31oz (9.00g)
PLJ12	12mm	12mm	5	No	1.98" (50.5mm)	0.59oz (17.0g)
PLJ1210		10mm			1.87" (47.5mm)	0.49oz (14.0g)
PLJ16	16mm	16mm	5	No	2.26" (57.5mm)	1.26oz (36.0g)

Technifit™ Push-to-Connect Fittings

Plug-In Branch Tee (Reducers Included) – PTJ

Plug-In Branch Tees provide two opposing push-to-connect ports with an insert stem at a 90° angle.

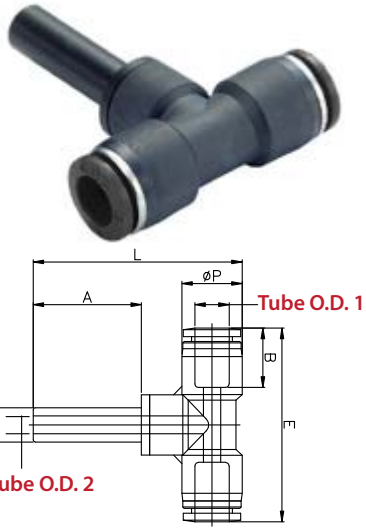

Fractional Tube Sizes

Model	Tube 1 OD	Tube 2 OD	Package Qty.	Stock	Length	Weight
PTJ5/32	5/32"	5/32"	10	Yes	1.68" (42.7mm)	0.40oz (11.6g)
PTJ3/16	3/16"	3/16"	10	No	1.70" (43.2mm)	0.40oz (11.4g)
PTJ1/4	1/4"	1/4"	10	No	1.87" (47.5mm)	0.57oz (16.4g)
PTJ1/4-5/32		5/32"			1.72" (43.7mm)	0.93oz (26.6g)
PTJ5/16	5/16"	5/16"	10	No	1.98" (50.5mm)	0.86oz (24.4g)
PTJ5/16-1/4		1/4"	5		1.90" (48.5mm)	
PTJ3/8	3/8"	3/8"	5	No	2.14"' (54.5mm)	1.42oz (40.4g)
PTJ3/8-1/4		1/4"			1.98" (50.5mm)	1.46oz (41.4g)
PTJ3/8-5/16		5/16"			2.06" (52.5mm)	
PTJ1/2	1/2"	1/2"	5	No	2.44" (62.0mm)	1.75oz (49.8g)
PTJ1/2-3/8		3/8"			2.23" (56.7mm)	

Metric Tube Sizes

Model	Tube 1 OD	Tube 2 OD	Package Qty.	Stock	Length	Weight
PTJ04	4mm	4mm	10	Yes	1.68" (42.7mm)	0.21oz (6.00g)
PTJ06	6mm	6mm	10	No	1.83" (46.7mm)	0.32oz (9.00g)
PTJ0604		4mm			1.72" (43.7mm)	
PTJ08	8mm	8mm	10	No	1.98" (50.5mm)	0.42oz (12.0g)
PTJ0806		6mm			1.87" (47.7mm)	
PTJ10	10mm	10mm	5	No	2.14" (54.5mm)	0.56oz (16.0g)
PTJ1008		8mm			2.06" (52.5mm)	
PTJ12	12mm	12mm	5	No	2.40" (61.1mm)	0.88oz (25.0g)
PTJ1210		10mm			2.23" (56.7mm)	

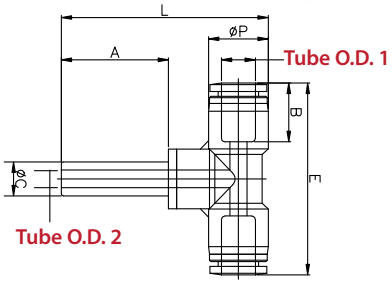

Plug-In Run Tee (Reducers Included) – PSJ

Plug-In Run Tees provide two push-to-connect ports with a insert stem.

Fractional Tube Sizes

Model	Tube 1 OD	Tube 2 OD	Package Qty.	Stock	Length	Weight
PSJ5/32	5/32"	5/32"	10	No	2.28" (58.0mm)	0.40oz (11.6g)
PSJ3/16	3/16"	3/16"	10	No	2.26" (57.6mm)	0.40oz (11.4g)
PSJ1/4	1/4"	1/4"	10	Yes	2.46" (62.5mm)	0.57oz (16.4g)
PSJ1/4-5/32		5/32"		No	2.32" (59.0mm)	0.58oz (16.6g)
PSJ5/16	5/16"	5/16"	10	No	2.64" (67.2mm)	0.86oz (24.4g)
PSJ5/16-1/4		1/4"			2.50" (63.5mm)	
PSJ3/8	3/8"	3/8"	5	No	2.87" (73.1mm)	1.42oz (40.4g)
PSJ3/8-1/4		1/4"			2.57" (65.5mm)	1.46oz (41.4g)
PSJ3/8-5/16		5/16"			2.72" (69.2mm)	
PSJ1/2	1/2"	1/2"	5	No	3.22" (81.8mm)	1.76oz (50.0g)
PSJ1/2-3/8		3/8"			2.96" (75.3mm)	1.74oz (49.4g)

Metric Tube Sizes

Model	Tube 1 OD	Tube 2 OD	Package Qty.	Stock	Length	Weight
PSJ04	4mm	4mm	10	No	2.28" (58.0mm)	0.24oz (7.00g)
PSJ06	6mm	6mm	10	No	2.45" (62.4mm)	0.35oz (10.0g)
PSJ0604		4mm			2.32" (59.0mm)	0.28oz (8.00g)
PSJ08	8mm	8mm	5	No	2.64" (67.1mm)	0.45oz (13.0g)
PSJ0806		6mm			2.49" (63.4mm)	
PSJ10	10mm	10mm	5	No	2.87" (73.1mm)	0.70oz (20.0g)
PSJ1008		8mm			2.72"(69.1mm)	0.59oz (17.0g)
PSJ12	12mm	12mm	5	No	3.21" (81.6mm)	0.98oz (28.0g)
PSJ1210		10mm			2.96" (75.3mm)	

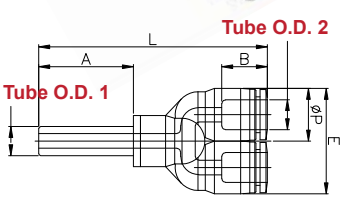

Plug-In "Y"– PYJ

Plug-In "Y" Fittings provide two parallel push-to-connect ports and an opposing insert stem.

Fractional Tube Sizes

Model	Tube 1 OD	Tube 2 OD	Package Qty.	Stock	Length	Weight
PYJ5/32	5/32"	5/32"	10	No	2.22" (56.4mm)	0.33oz (9.60g)
PYJ3/16	3/16"	3/16"	10	No	2.27" (57.9mm)	0.33oz (9.40g)
PYJ1/4	1/4"	1/4"	10	Yes	2.39" (60.9mm)	0.50oz (14.4g)
PYJ5/16	5/16"	5/16"	10	No	2.46" (62.5mm)	0.79oz (22.4g)
PYJ3/8	3/8"	3/8"	5	Yes	2.69" (68.5mm)	1.35oz (38.4g)
PYJ1/2	1/2"	1/2"	5	No	3.17" (80.6mm)	1.69oz (48.0g)

Metric Tube Sizes

Model	Tube 1 OD	Tube 2 OD	Package Qty.	Stock	Length	Weight
PYJ04	4mm	4mm	10	No	2.22" (56.4mm)	0.17oz (5.00g)
PYJ06	6mm	6mm	10	No	2.29" (58.4mm)	0.31oz (9.00g)
PYJ08	8mm	8mm	10	Yes	2.45" (62.4mm)	0.38oz (11.0g)
PYJ10	10mm	10mm	5	No	2.70" (68.6mm)	0.63oz (18.0g)
PYJ12	12mm	12mm	5	No	2.98" (75.7mm)	0.98oz (28.0g)

Technifit™ Push-to-Connect Fittings

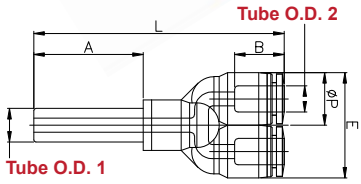

Plug-In Reducer "Y"– PWJ

Plug-In "Y" Fittings provide two parallel push-to-connect ports and an opposing insert stem of a differing size.

Fractional Tube Sizes

Model	Tube 1 OD	Tube 2 OD	Package Qty.	Stock	Length	Weight
PWJ1/4-5/32	1/4"	5/32"	10	No	2.25" (57.4mm)	0.51oz (14.6g)
PWJ5/16-1/4	5/16"	3/16"	10	No	2.43" (61.9mm)	0.79oz (22.4g)
PWJ3/8-1/4	3/8"	1/4"	10	No	2.51" (63.9mm)	1.38oz (39.4g)
PWJ3/8-5/16		5/32"			2.53" (64.5mm)	1.38oz (39.4g)

Metric Tube Sizes

Model	Tube 1 OD	Tube 2 OD	Package Qty.	Stock	Length	Weight
PWJ0604	6mm	4mm	10	No	2.25" (57.4mm)	0.21oz (6.00g)
PWJ0806	8mm	6mm	10	No	2.33" (59.4mm)	0.35oz (10.0g)
PWJ1008	10mm	8mm	10	Yes	2.53" (64.4mm)	0.45oz (13.0g)
PWJ1210	12mm	10mm	5	No	2.78" (70.8mm)	0.70oz (20.0g)

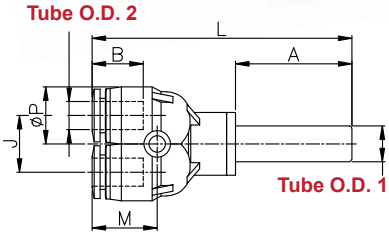

Plug-In Double Reducer "Y"– PXJ

Plug-In "Y" Fittings provide four parallel push-to-connect ports and an opposing insert stem of a differing size.

Metric Tube Sizes

Model	Tube 1 OD	Tube 2 OD	Package Qty.	Stock	Length	Weight
PXJ0604	6mm	4mm	5	No	1.96" (55.7mm)	0.45oz (13.0g)
PXJ0806	8mm	6mm	5	No	2.04" (58.0mm)	0.63oz (18.0g)

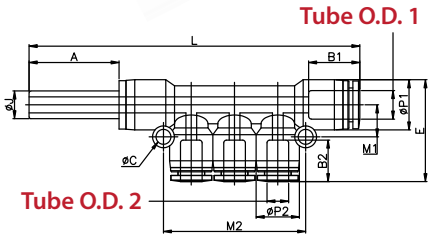

Plug-In Reducer Triple Branch – PKJ

Plug-In Reducer Triple Branch Fittings are a great way to branch three smaller tubes off of a main line. Each fitting is equipped with an insert stem, push-to-connect outlet, along with three smaller push-to-connect ports.

Fractional Tube Sizes

Model	Tube 1 OD	Tube 2 OD	Package Qty.	Stock	Length	Weight
PKJ3/16-5/32	3/16"	5/32"	5	No	3.24" (82.3mm)	0.85oz (24.1g)
PKJ1/4-5/32	1/4"	5/32"	5	No	3.31" (84.3mm)	0.85oz (24.1g)
PKJ5/16-5/32	5/16"	5/32"	5	No	3.51" (89.2mm)	1.30oz (37.1g)
PKJ5/16-3/16		3/16"			3.60" (91.5mm)	1.29oz (36.8g)
PKJ5/16-1/4		1/4"			3.75" (95.5mm)	
PKJ3/8-1/4	3/8"	1/4"	5	No	3.92" (99.7mm)	1.70oz (48.3g)
PKJ3/8-5/16		5/16"			4.29" (109.1mm)	

Metric Tube Sizes

Model	Tube 1 OD	Tube 2 OD	Package Qty.	Stock	Length	Weight
PKJ06-04	6mm	4mm	5	No	3.38" (86.1mm)	0.59oz (17.0g)
PKJ08-04	8mm	4mm	5	No	3.50" (89.1mm)	0.59oz (17.0g)
PKJ08-06		6mm			3.74" (95.1mm)	0.67oz (19.0g)
PKJ10-06	10mm	6mm	5	No	4.09" (103.9mm)	1.05oz (30.0g)
PKJ10-08		8mm			4.29" (109.2mm)	1.16oz (33.0g)

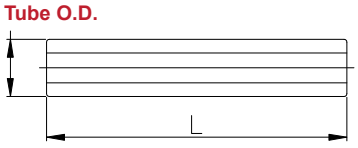

Plug-In Tube Splicer – PIJ

Plug-In Tube Splicers allow for joining two push-to-connect port fittings.

Fractional Tube Sizes

Model	Tube 1 OD	Tube 2 OD	Package Qty.	Stock	Length	Weight
PIJ5/32	5/32"	5/32"	10	Yes	1.41" (36.0mm)	0.03oz (1.00g)
PIJ3/16	3/16"	3/16"	10	No	1.49" (38.0mm)	0.03oz (1.00g)
PIJ1/4	1/4"	1/4"	10	Yes	1.57" (40.0mm)	0.03oz (1.00g)
PIJ5/16	5/16"	5/16"	10	No	1.65" (42.0mm)	0.07oz (2.00g)
PIJ3/8	3/8"	3/8"	10	Yes	1.77" (45.0mm)	0.10oz (3.00g)
PIJ1/2	1/2"	1/2"	10	No	1.96" (50.0mm)	0.14oz (4.00g)

Metric Tube Sizes

Model	Tube 1 OD	Tube 2 OD	Package Qty.	Stock	Length	Weight
PIJ04	4mm	4mm	10	No	1.41" (36.0mm)	0.03oz (1.00g)
PIJ06	6mm	6mm	10	No	1.49" (38.0mm)	0.03oz (1.00g)
PIJ08	8mm	8mm	10	No	1.57" (40.0mm)	0.03oz (1.00g)
PIJ10	10mm	10mm	10	No	1.77" (45.0mm)	0.10oz (3.00g)
PIJ12	12mm	12mm	10	No	1.88" (48.0mm)	0.14oz (4.00g)
PIJ14	14mm	14mm	10	No	2.04" (52.0mm)	0.17oz (5.00g)
PIJ16	16mm	16mm	10	No	2.08" (53.0mm)	0.21oz (6.00g)

Technifit™ Push-to-Connect Fittings

Plug-In Tube Reducer Splicer – PIG

Plug-In Tube Reducer Splicers allow for joining two push-to-connect port fittings of differing sizes.

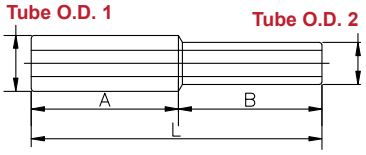

Fractional Tube Sizes

Model	Tube 1 OD	Tube 2 OD	Package Qty.	Stock	Length	Weight
PIG3/16-5/32	3/16"	5/32"	10	No	1.57" (40.0mm)	0.03oz (1.00g)
PIG1/4-5/32	1/4"	5/32"	10	No	1.61" (41.0mm)	0.03oz (1.00g)
PIG1/4-3/16		3/16"			1.61" (41.0mm)	
PIG5/16-1/4	5/16"	1/4"	10	No	1.69" (43.0mm)	0.07oz (2.00g)
PIG3/8-1/4	3/8"	1/4"	10	No	1.77" (45.0mm)	0.10oz (3.00g)
PIG3/8-5/16		5/16"			1.77" (45.0mm)	
PIG1/2-3/8	1/2"	3/8"	10	No	1.88" (48.0mm)	0.14oz (4.00g)

Metric Tube Sizes

Model	Tube 1 OD	Tube 2 OD	Package Qty.	Stock	Length	Weight
PIG06-04	4mm	4mm	10	No	1.49" (38.0mm)	0.03oz (1.00g)
PIG08-04	8mm	4mm	10	No	1.57" (40.0mm)	0.03oz (1.00g)
PIG08-06		6mm			1.61" (41.0mm)	0.07oz (2.00g)
PIG10-06	10mm	6mm	10	Yes	1.65" (42.0mm)	0.07oz (2.00g)
PIG10-08		8mm		No	1.73" (44.0mm)	0.10oz (3.00g)
PIG12-08	12mm	8mm	10	No	1.81" (46.0mm)	0.10oz (3.00g)
PIG12-10		10mm			1.85" (47.0mm)	0.10oz (3.00g)
PIG16-12	16mm	12mm	10	No	2.04" (52.0mm)	0.21oz (6.00g)

Plug – PP

Plugs provide a method of blocking off push-to-connect ports.

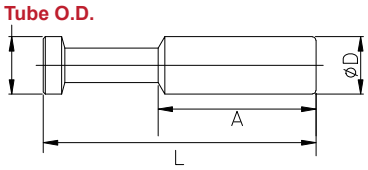

Fractional Tube Sizes

Model	Tube OD	Package Qty.	Stock	Length	Weight
PP5/32	5/32"	10	Yes	1.29" (30.0mm)	0.03oz (1.00g)
PP3/16	3/16"	10	Yes	1.29" (33.0mm)	0.03oz (1.00g)
PP1/4	1/4"	10	Yes	1.33" (34.0mm)	0.03oz (1.00g)
PP5/16	5/16"	10	Yes	1.49" (38.0mm)	0.03oz (1.00g)
PP3/8	3/8"	10	Yes	1.65" (42.0mm)	0.07oz (2.00g)
PP1/2	1/2"	10	Yes	1.81" (46.0mm)	0.10oz (3.00g)

Metric Tube Sizes

Model	Tube OD	Package Qty.	Stock	Length	Weight
PP04	4mm	10	Yes	1.29" (30.0mm)	0.03oz (1.00g)
PP06	6mm	10	Yes	1.33" (34.0mm)	0.03oz (1.00g)
PP08	8mm	10	Yes	1.49" (38.0mm)	0.07oz (2.00g)
PP10	10mm	10	Yes	1.65" (42.0mm)	0.10oz (3.00g)
PP12	12mm	10	Yes	1.81" (46.0mm)	0.14oz (4.00g)
PP16	16mm	10	Yes	1.96" (50.0mm)	0.28oz (8.00g)

Resin-Series: Caps

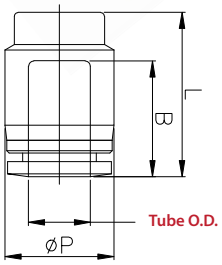

Cap – PPF

Caps provide a blocked push-to-connect port

Fractional Tube Sizes

Model	Tube OD	Package Qty.	Stock	Length	Weight
PPF5/32	5/32"	10	Yes	0.41" (10.5mm)	0.07oz (2.00g)
PPF3/16	3/16"	10	Yes	0.45" (11.5mm)	0.07oz (2.00g)
PPF1/4	1/4"	10	No	0.51" (13.0mm)	0.10oz (3.00g)
PPF5/16	5/16"	10	Yes	0.57" (14.5mm)	0.14oz (4.00g)
PPF3/8	3/8"	10	Yes	0.68" (17.5mm)	0.24oz (7.00g)
PPF1/2	1/2"	10	Yes	0.82" (21.0mm)	0.35oz (10.0g)

Metric Tube Sizes

Model	Tube OD	Package Qty.	Stock	Length	Weight
PPF04	4mm	10	Yes	0.41" (10.5mm)	0.07oz (2.00g)
PPF06	6mm	10	No	0.49" (12.5mm)	0.10oz (3.00g)
PPF08	8mm	10	Yes	0.57" (14.5mm)	0.14oz (4.00g)
PPF10	10mm	10	No	0.68" (17.5mm)	0.24oz (7.00g)
PPF12	12mm	10	No	0.80" (20.5mm)	0.35oz (10.0g)
PPF16	16mm	10	No	1.00" (25.5mm)	0.59oz (17.0g)

Resin-Series: Cartridge Fittings

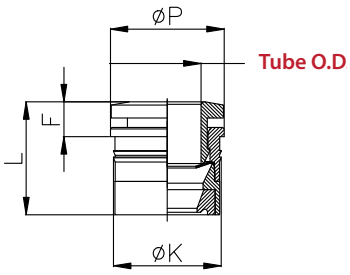

Cartridge Fitting – CAS

Cartridge Fittings provide users with the ability to rebuild or repair push-to-connect fittings

Fractional Tube Sizes

Model	Tube OD	Package Qty.	Stock	Length	Weight
CAS5/32	5/32"	10	Yes	0.44" (11.2mm)	0.10oz (3.00g)
CAS3/16	3/16"	10	Yes	0.48" (12.3mm)	0.10oz (3.00g)
CAS1/4	1/4"	10	Yes	0.50" (12.9mm)	0.12oz (3.50g)
CAS5/16	5/16"	10	No	0.54" (13.9mm)	0.14oz (4.00g)
CAS3/8	3/8"	10	Yes	0.59" (15.1mm)	0.15oz (4.50g)
CAS1/2	1/2"	10	Yes	0.70" (17.6mm)	0.17oz (5.00g)

Metric Tube Sizes

Model	Tube OD	Package Qty.	Stock	Length	Weight
CAS04	4mm	10	No	0.44" (11.2mm)	0.10oz (3.00g)
CAS06	6mm	10	Yes	0.48" (12.4mm)	0.12oz (3.50g)
CAS08	8mm	10	No	0.54" (13.9mm)	0.14oz (4.00g)
CAS10	10mm	10	Yes	0.59" (15.1mm)	0.15oz (4.50g)
CAS12	12mm	10	Yes	0.68" (17.4mm)	0.17oz (5.00g)

Resin-Series: Pneumatic Quick-Disconnection Plugs

Coupler Plug – PCP

Coupler Plugs consist of a push-to-connect port opposing a pneumatic quick-disconnect plug. This arrangement allows for tubing to be connected to pneumatic quick-disconnect couplings.

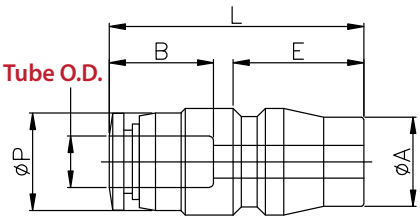

Fractional Tube Sizes

Model	Tube OD	Interchange	Package Qty.	Stock	Length	Weight
PCP5/32	5/32"	Japanese 1/4" Body Size	10	No	1.22" (31.0mm)	0.66oz (18.8g)
PCP3/16	3/16"		10	No	1.25" (31.8mm)	0.66oz (18.8g)
PCP1/4	1/4"		10	No	1.25" (31.9mm)	0.55oz (15.8g)
PCP5/16	5/16"		10	No	1.37" (35.0mm)	0.69oz (19.7g)
PCP3/8	3/8"		10	No	1.66" (42.2mm)	0.96oz (27.4g)
PCP1/2	1/2"		10	No	1.82" (46.4mm)	1.34oz (38.1g)

Metric Tube Sizes

Model	Tube OD	Interchange	Package Qty.	Stock	Length	Weight
PCP04	4mm	Japanese 1/4" Body Size	10	No	1.22" (31.0mm)	0.59oz (17.0g)
PCP06	6mm		10	No	1.24" (31.7mm)	0.56oz (16.0g)
PCP08	8mm		10	No	1.37" (34.9mm)	0.59oz (17.0g)
PCP10	10mm		10	No	1.66" (42.4mm)	0.88oz (25.0g)
PCP12	12mm		10	No	1.78" (45.4mm)	1.16oz (33.0g)
PCP16	16mm		10	No	1.94" (49.3mm)	1.83oz (52.0g)

Resin-Series: Banjo/Universal Fittings

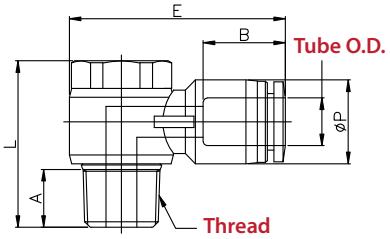

Swivel Male Banjo – PH

Banjo Fittings are arranged with a push-to-connect port and a male thread in a 90° configuration allowing for installation in confined spaces. All banjo fittings swivel 360°.

Fractional Tube Sizes

Model	Tube OD	Thread	Package Qty.	Stock	Hex	Length	Weight
PH1/8-U	1/8"	10-32 Male	10	Yes	5/16"	0.84" (21.5mm)	0.24oz (7.00g)
PH5/32-U	5/32"	10-32 Male	10	Yes	5/16"	0.99" (25.2mm)	0.27oz (7.80g)
PH5/32-N1		1/8" Male NPT		No	7/16"	1.20" (30.6mm)	0.83oz (23.8g)
PH5/32-N2		1/4" Male NPT		Yes	5/16"	1.35" (34.5mm)	1.05oz (29.8g)
PH3/16-U	3/16"	10-32 Male	10	Yes	5/16"	1.04" (26.6mm)	0.27oz (7.70g)
PH3/16-N1		1/8" Male NPT			7/16"	1.23" (31.4mm)	0.83oz (23.7g)
PH3/16-N2		1/4" Male NPT			19/32"	1.46" (37.3mm)	1.04oz (29.7g)
PH3/16-N3		3/8" Male NPT			3/4"	1.53" (39.1mm)	0.13oz (3.70g)
PH1/4-U	1/4"	10-32 Male	10	Yes	5/16"	1.12" (28.7mm)	0.30oz (8.70g)
PH1/4-N1		1/8" Male NPT			7/16"	1.25" (32.0mm)	0.83oz (23.7g)
PH1/4-N2		1/4" Male NPT			19/32"	1.41" (35.9mm)	1.25oz (35.7g)
PH1/4-N3		3/8" Male NPT		No	3/4"	1.56" (39.7mm)	1.57oz (44.7g)
PH1/4-01		1/8" Male BSPT (R)		Yes	11mm	1.25" (32.0mm)	0.83oz (23.7g)
PH1/4-02		1/4" Male BSPT (R)		No	15mm	1.41" (35.9mm)	1.25oz (35.7g)
PH1/4-M5		M5 x 0.8			8mm	1.12" (28.7mm)	0.30oz (8.70g)
PH5/16-N1	5/16"	1/8" Male NPT	10	Yes	7/16"	1.31" (33.3mm)	1.22oz (34.7g)
PH5/16-N2		1/4" Male NPT		No	19/32"	1.46" (37.2mm)	1.29oz (36.7g)
PH5/16-N3		3/8" Male NPT	5		3/4"	1.59" (40.5mm)	2.10oz (59.7g)
PH5/16-N4		1/2" Male NPT			15/16"	1.81" (46.0mm)	3.41oz (96.7g)
PH5/16-01		1/8" Male BSPT (R)	10		15mm	1.29" (33.0mm)	1.22oz (34.7g)
PH5/16-02		1/4" Male BSPT (R)			19mm	1.45" (37.0mm)	1.29oz (36.7g)
PH5/16-03		3/8" Male BSPT (R)	5		11mm	1.57" (40.0mm)	2.10oz (59.7g)
PH3/8-N2	3/8"	1/4" Male NPT	5	Yes	19/32"	1.57" (40.1mm)	2.08oz (59.2g)
PH3/8-N3		3/8" Male NPT			3/4"	1.65" (42.1mm)	3.14oz (89.2g)
PH3/8-N4		1/2" Male NPT		No	15/16"	1.86" (47.3mm)	3.49oz (99.2g)
PH3/8-02		1/4" Male BSPT (R)			15mm	1.57" (40.1mm)	2.08oz (59.2g)
PH3/8-03		3/8" Male BSPT (R)			19mm	1.65" (42.1mm)	3.14oz (89.2g)
PH1/2-N2	1/2"	1/4" Male NPT	5	Yes	19/32"	1.71" (43.5mm)	2.18oz (62.0g)
PH1/2-N3		3/8" Male NPT		No	3/4"	1.78" (45.3mm)	2.29oz (65.0g)
PH1/2-N4		1/2" Male NPT		Yes	15/16"	1.98" (50.5mm)	3.84oz (109g)

Swivel Male Banjo – PH (continued)

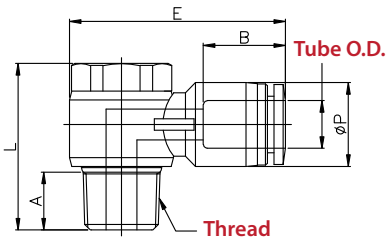

Metric Tube Sizes

Model	Tube OD	Thread	Package Qty.	Stock	Hex	Length	Weight
PH04-01	4mm	1/8" Male BSPT (R)	10	Yes	11mm	1.19" (30.3mm)	0.52oz (15.0g)
PH04-02		1/4" Male BSPT (R)		No	15mm	1.35" (34.3mm)	0.95oz (27.0g)
PH04-G01		1/8" Male BSPP (G)		Yes	8mm	1.19" (30.3mm)	0.52oz (15.0g)
PH04-G02		1/4" Male BSPP (G)		No	12mm	1.35" (34.3mm)	0.88oz (25.0g)
PH04-M5		M5 x 0.8		Yes	8mm	0.99" (25.2mm)	0.28oz (8.00g)
PH04-M6		M6 x 1.0		No	8mm	0.99" (25.2mm)	0.31oz (9.00g)
PH06-01	6mm	1/8" Male BSPT (R)	10	Yes	11mm	1.22" (31.2mm)	0.56oz (16.0g)
PH06-02		1/4" Male BSPT (R)		No	15mm	1.38" (35.2mm)	0.95oz (27.0g)
PH06-03		3/8" Male BSPT (R)	5		19mm	1.52" (38.7mm)	1.69oz (48.0g)
PH06-04		1/2" Male BSPT (R)			24mm	1.75" (44.7mm)	2.61oz (74.0g)
PH06-G01		1/8" Male BSPP (G)	10	Yes	8mm	1.22" (31.2mm)	0.56oz (16.0g
PH06-G02		1/4" Male BSPP (G)			12mm	1.38" (35.2mm)	0.91oz (26.0g)
PH06-G03		3/8" Male BSPP (G)	5	No	14mm	1.52" (38.7mm)	1.76oz (50.0g)
PH06-M5		M5 x 0.8	10	Yes	8mm	1.09" (27.7mm)	0.31oz (9.00g)
PH06-M6		M6 x 1.0		No	8mm	1.09" (27.7mm)	0.35oz (10.0g)
PH08-01	8mm	1/8" Male BSPT (R)	5	Yes	11mm	1.29" (32.9mm)	0.59oz (17.0g)
PH08-02		1/4" Male BSPT (R)			15mm	1.45" (36.9mm)	0.98oz (28.0g)
PH08-03		3/8" Male BSPT (R)	10		19mm	1.41" (39.9mm)	1.76oz (50.0g)
PH08-04		1/2" Male BSPT (R)		No	24mm	1.80" (45.8mm)	2.71oz (77.0g)
PH08-G01		1/8" Male BSPP (G)	10	Yes	8mm	1.29" (32.9mm)	0.59oz (17.0g)
PH08-G02		1/4" Male BSPP (G)			12mm	1.45" (36.9mm)	0.91oz (26.0g)
PH08-G03		3/8" Male BSPP (G)	5	No	14mm	1.57" (39.9mm)	1.76oz (50.0g)
PH08-G04		1/2" Male BSPP (G)		Yes	19mm	1.80" (45.8mm)	2.46oz (70.0g)
PH10-01	10mm	1/8" Male BSPT (R)	5	Yes	11mm	1.38" (35.1mm)	0.59oz (17.0g)
PH10-02		1/4" Male BSPT (R)			15mm	1.53" (38.9mm)	1.12oz (32.0g)
PH10-03		3/8" Male BSPT (R)			19mm	1.66" (42.2mm)	1.79oz (51.0g)
PH10-04		1/2" Male BSPT (R)		No	24mm	1.86" (47.4mm)	2.75oz (78.0g)
PH10-G02		1/4" Male BSPP (G)		Yes	12mm	1.53" (38.9mm)	0.98oz (28.0g)
PH10-G03		3/8" Male BSPP (G)			14mm	1.65" (42.0mm)	1.76oz (50.0g)
PH10-G04		1/2" Male BSPP (G)		No	19mm	1.86" (47.4mm)	2.57oz (73.0g)
PH12-02	12mm	1/4" Male BSPT (R)	5	No	15mm	1.66" (42.3mm)	1.23oz (35.0g)
PH12-03		3/8" Male BSPT (R)			19mm	1.77" (45.2mm)	1.86oz (53.0g)
PH12-04		1/2" Male BSPT (R)			24mm	1.97" (50.1mm)	2.89oz (82.0g)
PH12-G03		3/8" Male BSPP (G)			14mm	1.72" (43.7mm)	1.86oz (53.0g)
PH12-G04		1/2" Male BSPP (G)			19mm	1.57" (40.1mm)	2.75oz (78.0g)

Resin-Series: Banjo/Universal Fittings

Swivel Female Banjo – PHF

Swivel Female Banjo Fittings are arranged with a push-to-connect port 90° from opposing male and female threads. All banjo fittings swivel 360°.

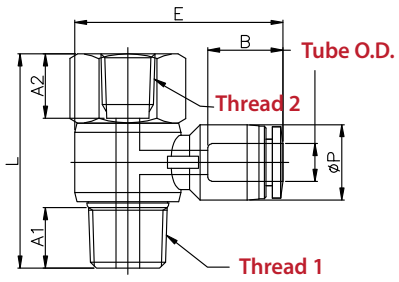

Fractional Tube Sizes

Model	Tube OD	Thread 1	Thread 2	Package Qty.	Stock	Hex	Length	Weight
PHF1/8-U	1/8"	10-32 Male	10-32 Female	10	No	5/16"	0.78" (20.0mm)	0.24oz (7.00g)
PHF5/32-U	5/32"	10-32 Male	10-32 Female	10	No	5/16"	0.78" (20.0mm)	0.27oz (7.80g)
PHF5/32-N1		1/8" Male NPT	1/8" Female NPT			9/16"	1.21" (30.9mm)	0.66oz (18.8g)
PHF3/16-U	3/16"	10-32 Male	10-32 Female	10	No	5/16"	0.78" (20.0mm)	0.27oz (7.70g)
PHF3/16-N1		1/8" Male NPT	1/8" Female NPT			9/16"	1.21" (30.9mm)	0.65oz (18.7g)
PHF3/16-N2		1/4" Male NPT	1/4" Female NPT			11/16"	1.40" (35.8mm)	1.11oz (31.7g)
PHF3/16-N3		3/8" Male NPT	3/8" Female NPT			7/8"	1.61" (41.0mm)	1.40oz (39.7g)
PHF1/4-U	1/4"	10-32 Male	10-32 Female	10	No	5/16"	0.78" (20.0mm)	0.30oz (8.70g)
PHF1/4-N1		1/8" Male NPT	1/8" Female NPT			9/16"	1.21" (30.9mm)	0.69oz (19.7g)
PHF1/4-N2		1/4" Male NPT	1/4" Female NPT			11/16"	1.40" (35.8mm)	1.18oz (33.7g)
PHF1/4-N3		3/8" Male NPT	3/8" Female NPT			7/8"	1.61" (41.0mm)	1.64oz (46.7g)
PHF1/4-01		1/8" Male BSPT (R)	1/8" Female BSPT (R)			14mm	1.20" (30.7mm)	0.69oz (19.7g)
PHF1/4-02		1/4" Male BSPT (R)	1/4" Female BSPT (R)			17mm	1.39" (35.5mm)	1.18oz (33.7g)
PHF1/4-M5		M5 x 0.8	M5 x 0.8			8mm	0.78" (20.0mm)	0.30oz (8.70g)
PHF5/16-N1	5/16"	1/8" Male NPT	1/8" Female NPT	10	No	9/16"	1.21" (30.9mm)	0.76oz (21.7g)
PHF5/16-N2		1/4" Male NPT	1/4" Female NPT			11/16"	1.40" (35.8mm)	1.22oz (34.7g)
PHF5/16-N3		3/8" Male NPT	3/8" Female NPT	5		7/8"	1.61" (41.0mm)	2.10oz (59.7g)
PHF5/16-N4		1/2" Male NPT	1/2" Female NPT			1"	1.96" (50.0mm)	3.37oz (95.7g)
PHF5/16-01		1/8" Male BSPT (R)	1/8" Female BSPT (R)	10		14mm	1.20" (30.7mm)	0.76oz (21.7g)
PHF5/16-02		1/4" Male BSPT (R)	1/4" Female BSPT (R)			17mm	1.39" (35.5mm)	1.22oz (34.7g)
PHF5/16-03		3/8" Male BSPT (R)	3/8" Female BSPT (R)	5		21mm	1.62" (41.2mm)	2.10oz (59.7g)
PHF3/8-N2	3/8"	1/4" Female NPT	1/4" Female NPT	5	No	11/16"	1.40" (35.8mm)	1.38oz (39.2g)
PHF3/8-N3		3/8" Female NPT	3/8" Female NPT			7/8"	1.61" (41.0mm)	2.26oz (64.2g)
PHF3/8-N4		1/2" Female NPT	1/2" Female NPT			1"	1.96" (50.0mm)	3.42oz (97.2g)
PHF3/8-02		1/4" Male BSPT (R)	1/4" Female BSPT (R)			17mm	1.39" (35.5mm)	1.38oz (39.2g)
PHF3/8-03		3/8" Male BSPT (R)	3/8" Female BSPT (R)			21mm	1.62" (41.2mm)	2.26oz (64.2g)
PHF1/2-N2	1/2"	1/4" Male NPT	1/4" Female NPT	5	Yes	11/16"	1.40" (35.8mm)	1.48oz (42.0g)
PHF1/2-N3		3/8" Male NPT	3/8" Female NPT		No	7/8"	1.61" (41.0mm)	2.36oz (67.0g)
PHF1/2-N4		1/2" Male NPT	1/2" Female NPT			1"	1.96" (50.0mm)	3.49oz (99.0g)

Swivel Female Banjo – PHF (continued)

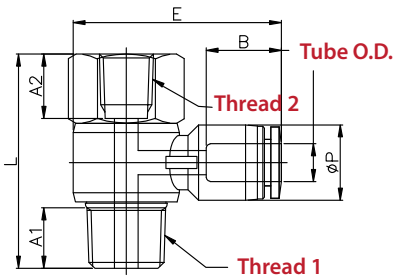

Metric Tube Sizes

Model	Tube OD	Thread 1	Thread 2	Package Qty.	Stock	Hex	Length	Weight
PHF04-01	4mm	1/8" Male BSPT (R)	1/8" Female BSPT (R)	5	No	14mm	0.91" (23.3mm)	0.70oz (20.0g)
PHF04-02		1/4" Male BSPT (R)	1/4" Female BSPT (R)			17mm	1.00" (25.3mm)	1.09oz (31.0g)
PHF04-G01		1/8" Male BSPP (G)	1/8" Female BSPP (G)			14mm	1.33" (33.9mm)	0.77oz (22.0g)
PHF04-G02		1/4" Male BSPP (G)	1/4" Female BSPP (G)			17mm	1.66" (42.4mm)	1.37oz (39.0g)
PHF04-G03		3/8" Male BSPP (G)	3/8" Female BSPP (G)			21mm	1.74" (44.4mm)	2.11oz (60.0g)
PHF04-G04		1/2" Male BSPP (G)	1/2" Female BSPP (G)			24mm	1.96" (49.9mm)	2.64oz (75.0g)
PHF04-M5		M5 x 0.8 Male	M5 x 0.8 Female			8mm	0.65" (16.6mm)	0.24oz (7.00g)
PHF04-M6		M6 x 1.0 Male	M6 x 1.0 Female				0.79" (20.2mm)	
PHF06-01	6mm	1/8" Male BSPT (R)	1/8" Female BSPT (R)	10	No	14mm	1.20" (30.7mm)	0.70oz (20.0g)
PHF06-02		1/4" Male BSPT (R)	1/4" Female BSPT (R)			17mm	1.39" (35.5mm)	1.12oz (32.0g)
PHF06-03		3/8" Male BSPT (R)	3/8" Female BSPT (R)	5		21mm	1.62" (41.2mm)	1.94oz (55.0g)
PHF06-04		1/2" Male BSPT (R)	1/2" Female BSPT (R)			24mm	1.94" (49.5mm)	2.29oz (65.0g)
PHF06-G01		1/8" Male BSPP (G)	1/8" Female BSPP (G)	10		14mm	1.33" (33.9mm)	0.77oz (22.0g)
PHF06-G02		1/4" Male BSPP (G)	1/4" Female BSPP (G)			17mm	1.66" (42.4mm)	1.37oz (39.0g)
PHF06-G03		3/8" Male BSPP (G)	3/8" Female BSPP (G)			21mm	1.74" (44.4mm)	2.15oz (61.0g)
PHF06-G04		1/2" Male BSPP (G)	1/2" Female BSPP (G)	5		24mm	1.96" (49.9mm)	2.68oz (76.0g)
PHF06-M5		M5 x 0.8 Male	M5 x 0.8 Female	10		8mm	0.89" (22.7mm)	0.31oz (9.00g)
PHF06-M6		M6 x 1.0 Male	M6 x 1.0 Female			11mm	0.95" (24.2mm)	0.56oz (16.0g)
PHF08-01	8mm	1/8" Male BSPT (R)	1/8" Female BSPT (R)	10	No	14mm	1.20" (30.7mm)	0.77oz (22.0g)
PHF08-02		1/4" Male BSPT (R)	1/4" Female BSPT (R)			17mm	1.39" (35.5mm)	1.12oz (32.0g)
PHF08-03		3/8" Male BSPT (R)	3/8" Female BSPT (R)	5		21mm	1.62" (41.2mm)	1.97oz (56.0g)
PHF08-04		1/2" Male BSPT (R)	1/2" Female BSPT (R)			24mm	1.94" (49.5mm)	2.99oz (85.0g)
PHF08-G01		1/8" Male BSPP (G)	1/8" Female BSPP (G)	10		14mm	1.33" (33.9mm)	0.88oz (25.0g)
PHF08-G02		1/4" Male BSPP (G)	1/4" Female BSPP (G)			17mm	1.66" (42.4mm)	1.41oz (40.0g)
PHF08-G03		3/8" Male BSPP (G)	3/8" Female BSPP (G)	5		21mm	1.74" (44.4mm)	2.18oz (62.0g)
PHF08-G04		1/2" Male BSPP (G)	1/2" Female BSPP (G)			24mm	1.96" (49.9mm)	2.75oz (78.0g)
PHF10-01	10mm	1/8" Male BSPT (R)	1/8" Female BSPT (R)	5	No	14mm	1.20" (30.7mm)	1.05oz (30.0g)
PHF10-02		1/4" Male BSPT (R)	1/4" Female BSPT (R)			17mm	1.39" (35.5mm)	1.19oz (34.0g)
PHF10-03		3/8" Male BSPT (R)	3/8" Female BSPT (R)			21mm	1.62" (41.2mm)	2.04oz (58.0g)
PHF10-04		1/2" Male BSPT (R)	1/2" Female BSPT (R)			24mm	1.94" (49.5mm)	3.03oz (86.0g)
PHF10-G01		1/8" Male BSPP (G)	1/8" Female BSPP (G)			14mm	1.33" (33.9mm)	0.95oz (27.0g)
PHF10-G02		1/4" Male BSPP (G)	1/4" Female BSPP (G)			17mm	1.66" (42.4mm)	1.55oz (44.0g)
PHF10-G03		3/8" Male BSPP (G)	3/8" Female BSPP (G)			21mm	1.74" (44.4mm)	2.25oz (64.0g)
PHF10-G04		1/2" Male BSPP (G)	1/2" Female BSPP (G)			24mm	1.96" (49.9mm)	2.82oz (80.0g)
PH12-02	12mm	1/4" Male BSPT (R)	1/4" Female BSPT (R)	5	No	17mm	1.39" (35.5mm)	1.94oz (55.0g)
PH12-03		3/8" Male BSPT (R)	3/8" Female BSPT (R)			21mm	1.62" (41.2mm)	2.18oz (62.0g)
PH12-G02		1/4" Male BSPP (G)	1/4" Female BSPP (G)			17mm	1.66" (42.4mm)	1.55oz (44.0g)
PH12-G03		3/8" Male BSPP (G)	3/8" Female BSPP (G)			21mm	1.74" (44.4mm)	2.39oz (68.0g)
PH12-G04		1/2" Male BSPP (G)	1/2" Female BSPP (G)			24mm	1.96" (49.9mm)	3.17oz (90.0g)

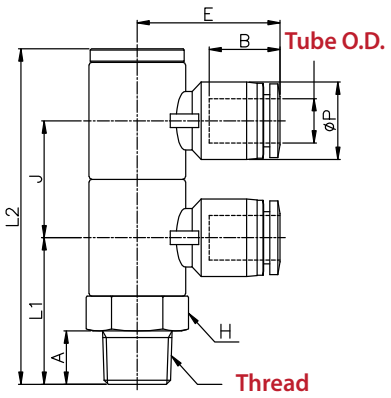

Swivel Double Universal Male Elbow – PHL (2)

Similar to a Banjo Fitting, Swivel Double Universal Male Elbows provide a male thread, with two parallel push-to-connect ports set 90° apart.

MetricTube Sizes

Model	Tube OD	Thread	Package Qty.	Stock	Hex	Length	Weight
PHL04-01(2)	4mm	1/8" Male BSPT (R)	5	No	14mm	2.03" (51.8mm)	1.30oz (37.0g)
PHL04-02(2)		1/4" Male BSPT (R)			17mm	2.47" (62.8mm)	2.08oz (59.0g)
PHL04-03(2)		3/8" Male BSPT (R)			21mm	2.55"(64.8mm)	3.24oz (92.0g)
PHL04-04(2)		1/2" Male BSPT (R)	4		24mm	2.88" (73.4mm)	4.76oz (135g)
PHL04-G01(2)		1/8" Male BSPP (G)	5		14mm	1.96" (49.8mm)	1.30oz (37.0g)
PHL04-G02(2)		1/4" Male BSPP (G)			17mm	2.39" (60.8mm)	2.08oz (59.0g)
PHL04-G03(2)		3/8" Male BSPP (G)			21mm	2.43" (61.8mm)	3.24oz (92.0g)
PHL04-G04(2)		1/2" Male BSPP (G)	4		24mm	2.71' (68.9mm)	4.76oz (135g)
PHL06-01(2)	6mm	1/8" Male BSPT (R)	5	No	14mm	2.03" (51.8mm)	1.34oz (38.0g)
PHL06-02(2)		1/4" Male BSPT (R)			17mm	2.47" (62.8mm)	2.15oz (61.0g)
PHL06-03(2)		3/8" Male BSPT (R)			21mm	2.55" (64.8mm)	3.28oz (93.0g)
PHL06-04(2)		1/2" Male BSPT (R)	4		24mm	2.88" (73.4mm)	4.83oz (137g)
PHL06-G01(2)		1/8" Male BSPP (G)	5		14mm	1.96" (49.8mm)	1.34oz (38.0g)
PHL06-G02(2)		1/4" Male BSPP (G)			17mm	2.39" (60.8mm)	2.15oz (61.0g)
PHL06-G03(2)		3/8" Male BSPP (G)			21mm	2.43" (61.8mm)	3.28oz (93.0g)
PHL06-G04(2)		1/2" Male BSPP (G)	4		24mm	2.71" (68.9mm)	4.83oz (137g)
PHL08-01(2)	8mm	1/8" Male BSPT (R)	5	No	14mm	2.03" (51.8mm)	1.41oz (40.0g)
PHL08-02(2)		1/4" Male BSPT (R)			17mm	2.47" (62.8mm)	2.18oz (62.0g)
PHL08-03(2)		3/8" Male BSPT (R)			21mm	2.55" (64.8mm)	3.31oz (94.0g)
PHL08-04(2)		1/2" Male BSPT (R)	4		24mm	2.88" (73.4mm)	4.86oz (138g)
PHL08-G01(2)		1/8" Male BSPP (G)	5		14mm	1.96" (49.8mm)	1.41oz (40.0g)
PHL08-G02(2)		1/4" Male BSPP (G)			17mm	2.39" (60.8mm)	2.18oz (62.0g)
PHL08-G03(2)		3/8" Male BSPP (G)			21mm	2.43" (61.8mm)	3.31oz (94.0g)
PHL08-G04(2)		1/2" Male BSPP (G)	4		24mm	2.71" (68.9mm)	4.86oz (138g)
PHL10-01(2)	10mm	1/8" Male BSPT (R)	5	No	14mm	2.03" (51.8mm)	1.55oz (44.0g)
PHL10-02(2)		1/4" Male BSPT (R)			17mm	2.47" (62.8mm)	2.32oz (66.0g)
PHL10-03(2)		3/8" Male BSPT (R)			21mm	2.55" (64.8mm)	3.49oz (99.0g)
PHL10-04(2)		1/2" Male BSPT (R)	4		24mm	2.88" (73.4mm)	5.00oz (142g)
PHL10-G01(2)		1/8" Male BSPP (G)	5		14mm	1.96" (49.8mm)	1.55oz (44.0g)
PHL10-G02(2)		1/4" Male BSPP (G)			17mm	2.39" (60.8mm)	2.32oz (66.0g)
PHL10-G03(2)		3/8" Male BSPP (G)			21mm	2.43" (61.8mm)	3.49oz (99.0g)
PHL10-G04(2)		1/2" Male BSPP (G)	4		24mm	2.71" (68.9mm)	5.00oz (142g)
PHL12-02(2)	12mm	1/4" Male BSPT (R)	3	No	17mm	2.47" (62.8mm)	2.53oz (72.0g)
PHL12-03(2)		3/8" Male BSPT (R)			21mm	2.55" (64.8mm)	3.70oz (105g)
PHL12-04(2)		1/2" Male BSPT (R)			24mm	2.88" (73.4mm)	5.25oz (149g)
PHL12-G02(2)		1/4" Male BSPP (G)			17mm	2.39" (60.8mm)	2.53oz (72.0g)
PHL12-G03(2)		3/8" Male BSPP (G)			21mm	2.43" (61.8mm)	3.70oz (105g)
PHL12-G04(2)		1/2" Male BSPP (G)			24mm	2.71" (68.9mm)	5.25oz (149g)

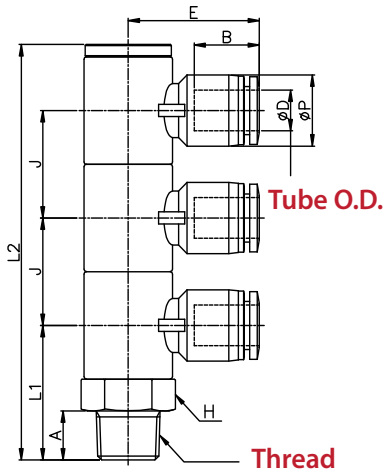

Swivel Triple Universal Male Elbow – PHL (3)

Similar to a Banjo Fitting, Swivel Double Universal Male Elbows provide a male thread, with three parallel push-to-connect ports set 90° apart.

MetricTube Sizes

Model	Tube OD	Thread	Package Qty.	Stock	Hex	Length	Weight
PHL04-01(3)	4mm	1/8" Male BSPT (R)	5	No	14mm	2.03" (51.8mm)	1.30oz (37.0g)
PHL04-02(3)		1/4" Male BSPT (R)			17mm	2.47" (62.8mm)	2.08oz (59.0g)
PHL04-03(3)		3/8" Male BSPT (R)			21mm	2.55" (64.8mm)	3.24oz (92.0g)
PHL04-04(3)		1/2" Male BSPT (R)	4		24mm	2.88" (73.4mm)	4.76oz (135g)
PHL04-G01(3)		1/8" Male BSPP (G)	5		14mm	2.66" (67.7mm)	1.69oz (48.0g)
PHL04-G02(3)		1/4" Male BSPP (G)			17mm	3.25" (82.7mm)	2.68oz (76.0g)
PHL04-G03(3)		3/8" Male BSPP (G)			21mm	3.29" (83.7mm)	4.12oz (117g)
PHL04-G04(3)		1/2" Male BSPP (G)	4		24mm	3.65" (92.8mm)	6.13oz (174g)
PHL06-01(3)	6mm	1/8" Male BSPT (R)	5	No	14mm	2.03" (51.8mm)	1.34oz (38.0g)
PHL06-02(3)		1/4" Male BSPT (R)			17mm	2.47" (62.8mm)	2.15oz (61.0g)
PHL06-03(3)		3/8" Male BSPT (R)			21mm	2.55" (64.8mm)	3.28oz (93.0g)
PHL06-04(3)		1/2" Male BSPT (R)	4		24mm	2.88" (73.4mm)	4.83oz (137g)
PHL06-G01(3)		1/8" Male BSPP (G)	5		14mm	2.66" (67.7mm)	1.76oz (50.0g)
PHL06-G02(3)		1/4" Male BSPP (G)			17mm	3.25" (82.7mm)	2.78oz (79.0g)
PHL06-G03(3)		3/8" Male BSPP (G)			21mm	3.25" (83.7mm)	4.05oz (115g)
PHL06-G04(3)		1/2" Male BSPP (G)	4		24mm	3.65" (92.8mm)	6.20oz (176g)
PHL08-01(3)	8mm	1/8" Male BSPT (R)	5	No	14mm	2.03" (51.8mm)	1.41oz (40.0g)
PHL08-02(3)		1/4" Male BSPT (R)			17mm	2.47" (62.8mm)	2.18oz (62.0g)
PHL08-03(3)		3/8" Male BSPT (R)			21mm	2.55" (64.8mm)	3.31oz (94.0g)
PHL08-04(3)		1/2" Male BSPT (R)	4		24mm	2.88" (73.4mm)	4.86oz (138g)
PHL08-G01(3)		1/8" Male BSPP (G)	5		14mm	2.66" (67.7mm)	1.86oz (53.0g)
PHL08-G02(3)		1/4" Male BSPP (G)			17mm	3.25" (82.7mm)	3.03oz (86.0g)
PHL08-G03(3)		3/8" Male BSPP (G)			21mm	3.29" (83.7mm)	4.26oz (121g)
PHL08-G04(3)		1/2" Male BSPP (G)	4		24mm	3.65" (92.8mm)	6.24oz (177g)
PHL10-01(3)	10mm	1/8" Male BSPT (R)	5	No	14mm	2.03" (51.8mm)	1.55oz (44.0g)
PHL10-02(3)		1/4" Male BSPT (R)			17mm	2.47" (62.8mm)	2.32oz (66.0g)
PHL10-03(3)		3/8" Male BSPT (R)			21mm	2.55" (64.8mm)	3.49oz (99.0g)
PHL10-04(3)		1/2" Male BSPT (R)	4		24mm	2.88" (73.4mm)	5.00oz (142g)
PHL10-G01(3)		1/8" Male BSPP (G)	5		14mm	2.66" (67.7mm)	2.08oz (59.0g)
PHL10-G02(3)		1/4" Male BSPP (G)			17mm	3.25" (82.7mm)	3.06oz (87.0g)
PHL10-G03(3)		3/8" Male BSPP (G)			21mm	3.29" (83.7mm)	4.51oz (128g)
PHL10-G04(3)		1/2" Male BSPP (G)	4		24mm	3.65" (92.8mm)	6.49oz (184g)
PHL12-02(3)	12mm	1/4" Male BSPT (R)	3	No	17mm	2.47" (62.8mm)	2.53oz (72.0g)
PHL12-03(3)		3/8" Male BSPT (R)			21mm	2.55" (64.8mm)	3.70oz (105g)
PHL12-04(3)		1/2" Male BSPT (R)			24mm	2.88" (73.4mm)	5.25oz (149g)
PHL12-G02(3)		1/4" Male BSPP (G)			17mm	3.25" (82.7mm)	3.45oz (98.0g)
PHL12-G03(3)		3/8" Male BSPP (G)			21mm	3.29" (83.7mm)	4.83oz (137g)
PHL12-G04(3)		1/2" Male BSPP (G)			24mm	3.65" (92.8mm)	6.84oz (194g)

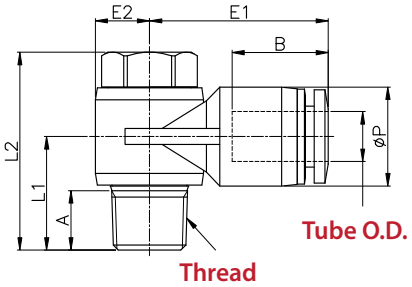

Swivel Male Branch "A" – PA

Similar in design to a banjo fitting, Swivel Male Branch Fittings provide two parallel push-to-connect ports 90° apart from a male fitting. All Swivel Male Branch "A" fittings swivel 360°.

MetricTube Sizes

Model	Tube OD	Thread	Package Qty.	Stock	Hex	Length	Weight
PA04-M5	4mm	M5 x 0.8	10	No	8mm	0.96" (24.4mm)	0.35oz (10.0g)
PA06-01	6mm	1/8" Male BSPT (R)	5	No	11mm	1.18" (30.1mm)	0.70oz (20.0g)
PA06-G01		1/8" Male BSPP (G)			8mm	1.18" (30.1mm)	0.70oz (20.0g)
PA08-02	8mm	1/4" Male BSPT (R)	5	No	15mm	1.45" (36.9mm)	1.05oz (30.0g)
PA08-G02		1/4" Male BSPP (G)			12mm	1.45" (36.9mm)	1.05oz (30.0g)
PA10-02	10mm	1/4" Male BSPT (R)	5	No	15mm	1.57" (39.9mm)	1.19oz (34.0g)
PA10-03		3/8" Male BSPT (R)			19mm	1.66" (42.2mm)	2.04oz (58.0g)
PA10-G02		1/4" Male BSPP (G)			12mm	1.57" (39.9mm)	1.19oz (34.0g)
PA10-G03		3/8" Male BSPT (R)			14mm	1.66" (42.2mm)	2.04oz (58.0g)
PA12-03	12mm	3/8" Male BSPT (R)	4	No	19mm	1.85" (47.1mm)	2.15oz (61.0g)
PA12-04		1/2" Male BSPT (R)			24mm	1.98" (50.3mm)	3.06oz (87.0g)
PA12-G03		3/8" Male BSPT (R)			14mm	1.85" (47.1mm)	2.15oz (61.0g)
PA12-G04		1/2" Male BSPP (G)			19mm	1.98" (50.3mm)	3.06oz (87.0g)

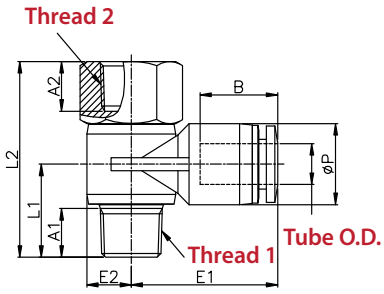

Swivel Female Branch "A" – PAF

Swivel Female Branch Fittings are arranged with two push-to-connect ports 90° from opposing male and female threads. All Swivel Female Branch "A" fittings swivel 360°.

MetricTube Sizes

Model	Tube OD	Thread 1	Thread 2	Package Qty.	Stock	Hex	Length	Weight
PAF04-M5	4mm	M5 x 0.8 Male	M5 x 0.8 Female	10	No	8mm	0.96" (24.4mm)	0.28oz (8.00g)
PAF06-01	6mm	1/8" Male BSPT (R)	1/8" Female BSPT (R)	5	No	14mm	1.18" (30.1mm)	0.77oz (22.0g)
PAF06-G01		1/8" Male BSPP (G)	1/8" Female BSPP (G)			14mm	1.59" (40.6mm)	0.77oz (22.0g)
PAF08-02	8mm	1/4" Male BSPT (R)	1/4" Female BSPT (R)	5	No	17mm	1.53" (38.9mm)	1.34oz (38.0g)
PAF08-G02		1/4" Male BSPP (G)	1/4" Female BSPP (G)			17mm	1.41" (35.9mm)	1.34oz (38.0g)
PAF10-02	10mm	1/4" Male BSPT (R)	1/4" Female BSPT (R)	5	No	17mm	1.57" (39.9mm)	1.37oz (39.0g)
PAF10-03		3/8" Male BSPT (R)	3/8" Female BSPT (R)			21mm	1.66" (42.2mm)	2.15oz (61.0g)
PAF10-G02		1/4" Male BSPP (G)	1/4" Female BSPP (G)			17mm	1.47" (37.5mm)	1.37oz (39.0g)
PAF10-G03		3/8" Male BSPT (R)	3/8" Female BSPT (R)			21mm	1.62" (41.4mm)	2.15oz (61.0g)
PAF12-03	12mm	3/8" Male BSPT (R)	3/8" Female BSPT (R)	4	No	21mm	1.81" (46.1mm)	2.46oz (70.0g)
PAF12-04		1/2" Male BSPT (R)	1/2" Female BSPT (R)			24mm	1.98" (50.3mm)	3.24oz (92.0g)
PAF12-G03		3/8" Male BSPT (R)	3/8" Female BSPT (R)			21mm	1.73" (44.1mm)	2.46oz (70.0g)
PAF12-G04		1/2" Male BSPP (G)	1/2" Female BSPP (G)			24mm	1.91" (48.6mm)	3.24oz (92.0g)

Technifit™ Push-to-Connect Fittings

Swivel Male Double Branch “A” – PAT (2)

Similar in design to a banjo fitting, Swivel Male Branch Fittings provide four parallel push-to-connect ports 90° apart from a male fitting. All Swivel Male Branch “A” fittings swivel 360°.

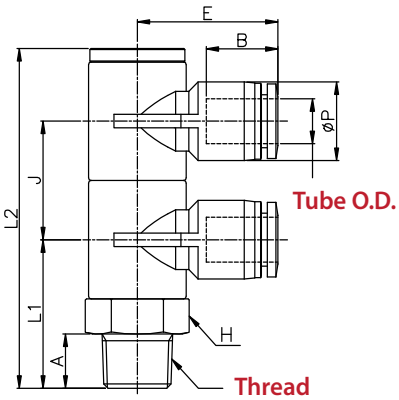

MetricTube Sizes

Model	Tube OD	Thread	Package Qty.	Stock	Hex	Length	Weight
PAT04-01(2)	4mm	1/8” Male BSPT (R)	5	No	14mm	2.03” (51.8mm)	1.41oz (40.0g)
PAT04-02(2)		1/4” Male BSPT (R)			17mm	2.47” (62.8mm)	2.18oz (62.0g)
PAT04-03(2)		3/8” Male BSPT (R)	4		21mm	2.55” (64.8mm)	3.35oz (95.0g)
PAT04-04(2)		1/2” Male BSPT (R)	3		24mm	2.88” (73.4mm)	4.90oz (139g)
PAT04-G01(2)		1/8” Male BSPP (G)	5		14mm	1.96” (49.8mm)	1.41oz (40.0g)
PAT04-G02(2)		1/4” Male BSPP (G)			17mm	2.39” (60.8mm)	2.18oz (62.0g)
PAT04-G03(2)		3/8” Male BSPP (G)	4		21mm	2.43” (61.8mm)	3.35oz (95.0g)
PAT04-G04(2)		1/2” Male BSPP (G)	3		24mm	2.71” (68.9mm)	4.90oz (139g)
PAT06-01(2)	6mm	1/8” Male BSPT (R)	5	No	14mm	2.03” (51.8mm)	1.51oz (43.0g)
PAT06-02(2)		1/4” Male BSPT (R)	4		17mm	2.47” (62.8mm)	1.86oz (53.0g)
PAT06-03(2)		3/8” Male BSPT (R)			21mm	2.55” (64.8mm)	3.42oz (97.0g)
PAT06-04(2)		1/2” Male BSPT (R)	3		24mm	2.88” (73.4mm)	4.97oz (141g)
PAT06-G01(2)		1/8” Male BSPP (G)	5		14mm	1.96” (49.8mm)	1.51oz (43.0g)
PAT06-G02(2)		1/4” Male BSPP (G)	4		17mm	2.39” (60.8mm)	1.86oz (53.0g)
PAT06-G03(2)		3/8” Male BSPP (G)			21mm	2.43” (61.8mm)	3.42oz (97.0g)
PAT06-G04(2)		1/2” Male BSPP (G)	3		24mm	2.71” (68.9mm)	4.97oz (141g)
PAT08-01(2)	8mm	1/8” Male BSPT (R)	4	No	14mm	2.03” (51.8mm)	1.69oz (48.0g)
PAT08-02(2)		1/4” Male BSPT (R)			17mm	2.47” (62.8mm)	2.46oz (70.0g)
PAT08-03(2)		3/8” Male BSPT (R)	3		21mm	2.55” (64.8mm)	3.63oz (103g)
PAT08-04(2)		1/2” Male BSPT (R)			24mm	2.88” (73.4mm)	5.14oz (146g)
PAT08-G01(2)		1/8” Male BSPP (G)	5		14mm	1.96” (49.8mm)	1.69oz (48.0g)
PAT08-G02(2)		1/4” Male BSPP (G)	4		17mm	2.39” (60.8mm)	2.46oz (70.0g)
PAT08-G03(2)		3/8” Male BSPP (G)			21mm	2.43” (61.8mm)	3.63oz (103g)
PAT08-G04(2)		1/2” Male BSPP (G)	3		24mm	2.71” (68.9mm)	5.14oz (146g)
PAT10-01(2)	10mm	1/8” Male BSPT (R)	3	No	14mm	2.03” (51.8mm)	2.64oz (68.0g)
PAT10-02(2)		1/4” Male BSPT (R)			17mm	2.47” (62.8mm)	2.75oz (78.0g)
PAT10-03(2)		3/8” Male BSPT (R)			21mm	2.55” (64.8mm)	3.88oz (110g)
PAT10-04(2)		1/2” Male BSPT (R)	2		24mm	2.88” (73.4mm)	5.43oz (154g)
PAT10-G01(2)		1/8” Male BSPP (G)	3		14mm	1.96” (49.8mm)	2.39oz (68.0g)
PAT10-G02(2)		1/4” Male BSPP (G)			17mm	2.39” (60.8mm)	2.08oz (78.0g)
PAT10-G03(2)		3/8” Male BSPP (G)			21mm	2.43” (61.8mm)	2.75oz (110g)
PAT10-G04(2)		1/2” Male BSPP (G)	2		24mm	2.71” (68.9mm)	5.43oz (154g)
PAT12-02(2)	12mm	1/4” Male BSPT (R)	3	No	17mm	2.47” (62.8mm)	3.20oz (91.0g)
PAT12-03(2)		3/8” Male BSPT (R)	2		21mm	2.55” (64.8mm)	4.30oz (122g)
PAT12-04(2)		1/2” Male BSPT (R)	1		24mm	2.88” (73.4mm)	5.89oz (167g)
PAT12-G02(2)		1/4” Male BSPP (G)	3		17mm	2.39” (60.8mm)	3.20oz (91.0g)
PAT12-G03(2)		3/8” Male BSPP (G)	2		21mm	2.43” (61.8mm)	4.30oz (122g)
PAT12-G04(2)		1/2” Male BSPP (G)	1		24mm	2.71” (68.9mm)	5.89oz (167g)

Swivel Male Triple Branch "A" – PAT (3)

Similar in design to a banjo fitting, Swivel Male Branch Fittings provide six parallel push-to-connect ports 90° apart from a male fitting. All Swivel Male Branch "A" fittings swivel 360.

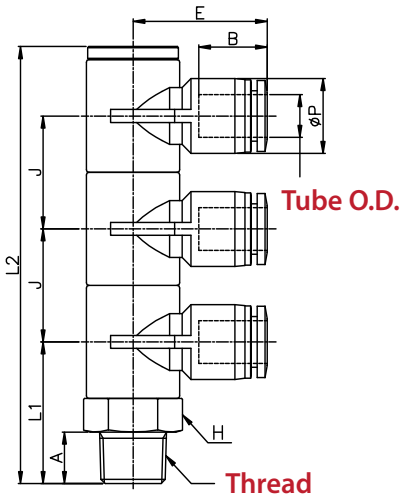

MetricTube Sizes

Model	Tube OD	Thread	Package Qty.	Stock	Hex	Length	Weight
PAT04-01(3)	4mm	1/8" Male BSPT (R)	5	No	14mm	2.74" (69.7mm)	1.86oz (53.0g)
PAT04-02(3)		1/4" Male BSPT (R)			17mm	3.33" (84.7mm)	2.82oz (80.0g)
PAT04-03(3)		3/8" Male BSPT (R)	3		21mm	3.41" (86.7mm)	4.30oz (122g)
PAT04-04(3)		1/2" Male BSPT (R)	2		24mm	3.83" (97.3mm)	6.59oz (187g)
PAT04-G01(3)		1/8" Male BSPP (G)	5		14mm	2.66" (67.7mm)	1.51oz (53.0g)
PAT04-G02(3)		1/4" Male BSPP (G)			17mm	3.25" (82.7mm)	2.82oz (80.0g)
PAT04-G03(3)		3/8" Male BSPP (G)	3		21mm	3.29" (83.7mm)	4.30oz (122g)
PAT04-G04(3)		1/2" Male BSPP (G)	2		24mm	3.65" (92.8mm)	6.59oz (187g)
PAT06-01(3)	6mm	1/8" Male BSPT (R)	4	No	14mm	2.74" (69.7mm)	2.25oz (64.0g)
PAT06-02(3)		1/4" Male BSPT (R)	3		17mm	3.33" (84.7mm)	3.03oz (86.0g)
PAT06-03(3)		3/8" Male BSPT (R)			21mm	3.41" (86.7mm)	4.44oz (126g)
PAT06-04(3)		1/2" Male BSPT (R)	2		24mm	3.83" (97.3mm)	6.38oz (181g)
PAT06-G01(3)		1/8" Male BSPP (G)	5		14mm	2.66" (67.7mm)	2.25oz (64.0g)
PAT06-G02(3)		1/4" Male BSPP (G)	3		17mm	3.25" (82.7mm)	3.03oz (86.0g)
PAT06-G03(3)		3/8" Male BSPP (G)			21mm	3.29" (83.7mm)	4.44oz (126g)
PAT06-G04(3)		1/2" Male BSPP (G)	2		24mm	3.65" (92.8mm)	6.38oz (181g)
PAT08-01(3)	8mm	1/8" Male BSPT (R)	3	No	14mm	2.74" (69.7mm)	2.25oz (64.0g)
PAT08-02(3)		1/4" Male BSPT (R)			17mm	3.33" (84.7mm)	3.24oz (92.0g)
PAT08-03(3)		3/8" Male BSPT (R)	2		21mm	3.41" (86.7mm)	4.76oz (135g)
PAT08-04(3)		1/2" Male BSPT (R)			24mm	3.83" (97.3mm)	7.05oz (200g)
PAT08-G01(3)		1/8" Male BSPP (G)	3		14mm	2.66" (67.7mm)	2.25oz (64.0g)
PAT08-G02(3)		1/4" Male BSPP (G)			17mm	3.25" (82.7mm)	3.24oz (92.0g)
PAT08-G03(3)		3/8" Male BSPP (G)	2		21mm	3.29" (83.7mm)	4.76oz (135g)
PAT08-G04(3)		1/2" Male BSPP (G)			24mm	3.65" (92.8mm)	7.05oz (200g)
PAT10-01(3)	10mm	1/8" Male BSPT (R)	2	No	14mm	2.74" (69.7mm)	2.82oz (80.0g)
PAT10-02(3)		1/4" Male BSPT (R)			17mm	3.33" (84.7mm)	3.73oz (106g)
PAT10-03(3)		3/8" Male BSPT (R)			21mm	3.41" (86.7mm)	5.07oz (144g)
PAT10-04(3)		1/2" Male BSPT (R)			24mm	3.83" (97.3mm)	7.51oz (213g)
PAT10-G01(3)		1/8" Male BSPP (G)			14mm	2.66" (67.7mm)	2.82oz (80.0g)
PAT10-G02(3)		1/4" Male BSPP (G)			17mm	3.25" (82.7mm)	3.73oz (106g)
PAT10-G03(3)		3/8" Male BSPP (G)			21mm	3.29" (83.7mm)	5.07oz (144g)
PAT10-G04(3)		1/2" Male BSPP (G)			24mm	3.65" (92.8mm)	7.51oz (213g)
PAT12-02(3)	12mm	1/4" Male BSPT (R)	2	No	17mm	3.33" (84.7mm)	4.33oz (123g)
PAT12-03(3)		3/8" Male BSPT (R)	1		21mm	3.41" (86.7mm)	5.82oz (165g)
PAT12-04(3)		1/2" Male BSPT (R)			24mm	3.83" (97.3mm)	7.76oz (220g)
PAT12-G02(3)		1/4" Male BSPP (G)	2		17mm	3.25" (82.7mm)	4.33oz (123g)
PAT12-G03(3)		3/8" Male BSPP (G)	1		21mm	3.29" (83.7mm)	5.82oz (165g)
PAT12-G04(3)		1/2" Male BSPP (G)			24mm	3.65" (92.8mm)	7.76oz (220g)

Technifit™ Push-to-Connect Fittings

Swivel Universal Male Tee – PHT (1)

Similar in design to a banjo fitting, Swivel Universal Male Tee Fittings provide two opposing push-to-connect ports 90° apart from a male fitting. All Swivel Universal Male Tee fittings swivel 360°.

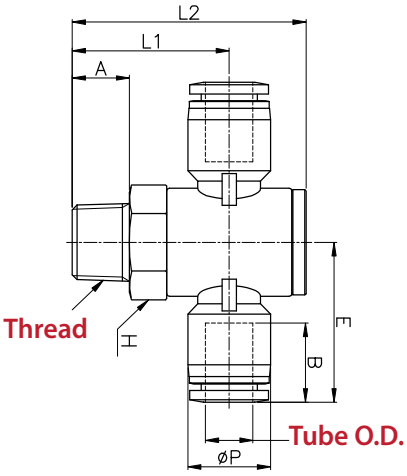

MetricTube Sizes

Model	Tube OD	Thread	Package Qty.	Stock	Hex	Length	Weight
PHT04-01(1)	4mm	1/8" Male BSPT (R)	5	No	14mm	1.83" (46.6mm)	1.09oz (31.0g)
PHT04-02(1)		1/4" Male BSPT (R)			17mm	1.97" (50.2mm)	1.65oz (47.0g)
PHT04-03(1)		3/8" Male BSPT (R)			21mm	2.12" (54.0mm)	2.50oz (71.0g)
PHT04-04(1)		1/2" Male BSPT (R)			24mm	2.28" (58.0mm)	3.70oz (105g)
PHT04-G01(1)		1/8" Male BSPP (G)			14mm	1.83" (46.6mm)	1.05oz (30.0g)
PHT04-G02(1)		1/4" Male BSPP (G)			17mm	1.97" (50.2mm)	1.62oz (46.0g)
PHT04-G03(1)		3/8" Male BSPP (G)			21mm	2.04" (52.0mm)	2.39oz (68.0g)
PHT04-G04(1)		1/2" Male BSPP (G)			24mm	2.28" (58.0mm)	3.45oz (98.0g)
PHT06-01(1)	6mm	1/8" Male BSPT (R)	5	No	14mm	1.89" (48.2mm)	1.12oz (32.0g)
PHT06-02(1)		1/4" Male BSPT (R)			17mm	2.04" (52.0mm)	1.69oz (48.0g)
PHT06-03(1)		3/8" Male BSPT (R)			21mm	2.19" (55.8mm)	2.57oz (73.0g)
PHT06-04(1)		1/2" Male BSPT (R)			24mm	2.30" (58.6mm)	3.73oz (106g)
PHT06-G01(1)		1/8" Male BSPP (G)			14mm	1.89" (48.2mm)	1.09oz (31.0g)
PHT06-G02(1)		1/4" Male BSPP (G)			17mm	2.04" (52.0mm)	1.65oz (47.0g)
PHT06-G03(1)		3/8" Male BSPP (G)			21mm	2.19" (55.8mm)	2.46oz (70.0g)
PHT06-G04(1)		1/2" Male BSPP (G)			24mm	2.30" (58.6mm)	3.52oz (100g)
PHT08-01(1)	8mm	1/8" Male BSPT (R)	5	No	14mm	2.01" (51.2mm)	1.19oz (34.0g)
PHT08-02(1)		1/4" Male BSPT (R)			17mm	2.15" (54.8mm)	1.76oz (50.0g)
PHT08-03(1)		3/8" Male BSPT (R)			21mm	2.30" (58.6mm)	2.61oz (74.0g)
PHT08-04(1)		1/2" Male BSPT (R)			24mm	2.41" (61.4mm)	3.80oz (108g)
PHT08-G01(1)		1/8" Male BSPP (G)			14mm	2.01" (51.2mm)	1.16oz (33.0g)
PHT08-G02(1)		1/4" Male BSPP (G)			17mm	2.15" (54.8mm)	1.69oz (48.0g)
PHT08-G03(1)		3/8" Male BSPP (G)			21mm	2.30" (58.6mm)	2.50oz (71.0g)
PHT08-G04(1)		1/2" Male BSPP (G)			24mm	2.41" (61.4mm)	3.59oz (102g)
PHT10-01(1)	10mm	1/8" Male BSPT (R)	5	No	14mm	2.21" (56.2mm)	1.34oz (38.0g)
PHT10-02(1)		1/4" Male BSPT (R)			17mm	2.34" (59.6mm)	1.90oz (54.0g)
PHT10-03(1)		3/8" Male BSPT (R)			21mm	2.51" (63.8mm)	2.75oz (78.0g)
PHT10-04(1)		1/2" Male BSPT (R)			24mm	2.65" (67.4mm)	3.91oz (111g)
PHT10-G01(1)		1/8" Male BSPP (G)			14mm	2.21" (56.2mm)	0.88oz (37.0g)
PHT10-G02(1)		1/4" Male BSPP (G)			17mm	2.34" (59.6mm)	1.30oz (52.0g)
PHT10-G03(1)		3/8" Male BSPP (G)			21mm	2.51" (63.8mm)	2.64oz (75.0g)
PHT10-G04(1)		1/2" Male BSPP (G)			24mm	2.65" (67.4mm)	3.70oz (105g)
PHT12-02(1)	12mm	1/4" Male BSPT (R)	5	No	17mm	2.59" (66.0mm)	2.15oz (61.0g)
PHT12-03(1)		3/8" Male BSPT (R)			21mm	2.76" (70.2mm)	2.99oz (85.0g)
PHT12-04(1)		1/2" Male BSPT (R)			24mm	2.94" (74.8mm)	4.16oz (118g)
PHT12-G02(1)		1/4" Male BSPP (G)			17mm	2.59" (66.0mm)	2.11oz (60.0g)
PHT12-G03(1)		3/8" Male BSPP (G)			21mm	2.76" (70.2mm)	2.89oz (82.0g)
PHT12-G04(1)		1/2" Male BSPP (G)			24mm	2.94" (74.8mm)	3.95oz (112g)

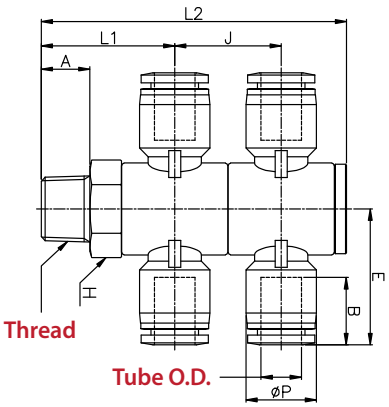

Swivel Double Universal Male Tee – PHT (2)

Similar in design to a banjo fitting, Swivel Universal Male Tee Fittings provide four opposing push-to-connect ports 90° apart from a male fitting. All Swivel Universal Male Tee fittings swivel 360°.

MetricTube Sizes

Model	Tube OD	Thread	Package Qty.	Stock	Hex	Length	Weight
PHT04-01(2)	4mm	1/8" Male BSPT (R)	5	No	14mm	2.03" (51.8mm)	1.69oz (43.0g)
PHT04-02(2)		1/4" Male BSPT (R)			17mm	2.47" (62.8mm)	2.59oz (66.0g)
PHT04-03(2)		3/8" Male BSPT (R)	4		21mm	2.55" (64.8mm)	3.66oz (93.2g)
PHT04-04(2)		1/2" Male BSPT (R)	3		24mm	2.88" (73.4mm)	5.15oz (131g)
PHT04-G01(2)		1/8" Male BSPP (G)	5		14mm	1.96" (49.8mm)	1.65oz (42.0g)
PHT04-G02(2)		1/4" Male BSPP (G)			17mm	2.39" (60.8mm)	2.55oz (65.0g)
PHT04-G03(2)		3/8" Male BSPP (G)	4		21mm	2.43" (61.8mm)	3.89oz (99.0g)
PHT04-G04(2)		1/2" Male BSPP (G)	3		24mm	2.71" (68.9mm)	5.51oz (140g)
PHT06-01(2)	6mm	1/8" Male BSPT (R)	5	No	14mm	2.03" (51.8mm)	1.64oz (41.8g)
PHT06-02(2)		1/4" Male BSPT (R)			17mm	2.47" (62.8mm)	2.71oz (69.0g)
PHT06-03(2)		3/8" Male BSPT (R)	4		21mm	2.55" (64.8mm)	3.73oz (94.8g)
PHT06-04(2)		1/2" Male BSPT (R)	3		24mm	2.88" (73.4mm)	5.31oz (135g)
PHT06-G01(2)		1/8" Male BSPP (G)	5		14mm	1.96" (49.8mm)	1.77oz (45.0g)
PHT06-G02(2)		1/4" Male BSPP (G)			17mm	2.39" (60.8mm)	2.66oz (68.0g)
PHT06-G03(2)		3/8" Male BSPP (G)	4		21mm	2.43" (61.8mm)	3.93oz (100g)
PHT06-G04(2)		1/2" Male BSPP (G)	3		24mm	2.71" (68.9mm)	5.59oz (142g)
PHT08-01(2)	8mm	1/8" Male BSPT (R)	4	No	14mm	2.03" (51.8mm)	1.96oz (50.0g)
PHT08-02(2)		1/4" Male BSPT (R)			17mm	2.47" (62.8mm)	2.57oz (73.0g)
PHT08-03(2)		3/8" Male BSPT (R)			21mm	2.55" (64.8mm)	3.41oz (96.8g)
PHT08-04(2)		1/2" Male BSPT (R)	3		24mm	2.88" (73.4mm)	4.86oz (138g)
PHT08-G01(2)		1/8" Male BSPP (G)	4		14mm	1.96" (49.8mm)	1.72oz (49.0g)
PHT08-G02(2)		1/4" Male BSPP (G)			17mm	2.39" (60.8mm)	2.53oz (72.0g)
PHT08-G03(2)		3/8" Male BSPP (G)			21mm	2.03" (51.8mm)	3.66oz (104g)
PHT08-G04(2)		1/2" Male BSPP (G)	3		24mm	2.71" (68.9mm)	5.14oz (146g)
PHT10-01(2)	10mm	1/8" Male BSPT (R)	3	No	14mm	2.03" (51.8mm)	2.11oz (60.0g)
PHT10-02(2)		1/4" Male BSPT (R)			17mm	2.47" (62.8mm)	2.46oz (69.8g)
PHT10-03(2)		3/8" Male BSPT (R)			21mm	2.55" (64.8mm)	4.16oz (118g)
PHT10-04(2)		1/2" Male BSPT (R)			24mm	2.88" (73.4mm)	5.07oz (144g)
PHT10-G01(2)		1/8" Male BSPP (G)			14mm	1.96" (49.8mm)	2.08oz (59.0g)
PHT10-G02(2)		1/4" Male BSPP (G)			17mm	2.39" (60.8mm)	2.92oz (83.0g)
PHT10-G03(2)		3/8" Male BSPP (G)			21mm	2.43" (61.8mm)	4.05oz (115g)
PHT10-G04(2)		1/2" Male BSPP (G)			24mm	2.71" (68.9mm)	5.46oz (155g)
PHT12-02(2)	12mm	1/4" Male BSPT (R)	3	No	17mm	2.47" (62.8mm)	3.49oz (99.0g)
PHT12-03(2)		3/8" Male BSPT (R)			21mm	2.55" (64.8mm)	4.58oz (130g)
PHT12-04(2)		1/2" Male BSPT (R)			24mm	2.88" (73.4mm)	6.13oz (174g)
PHT12-G02(2)		1/4" Male BSPP (G)			17mm	2.39" (60.8mm)	3.45oz (98.0g)
PHT12-G03(2)		3/8" Male BSPP (G)			21mm	2.43" (61.8mm)	4.47oz (127g)
PHT12-G04(2)		1/2" Male BSPP (G)	2		24mm	2.71" (68.9mm)	5.92oz (168g)

Technifit™ Push-to-Connect Fittings

Swivel Triple Universal Male Tee – PHT (3)

Similar in design to a banjo fitting, Swivel Universal Male Tee Fittings provide six opposing push-to-connect ports 90° apart from a male fitting. All Swivel Universal Male Tee fittings swivel 360°.

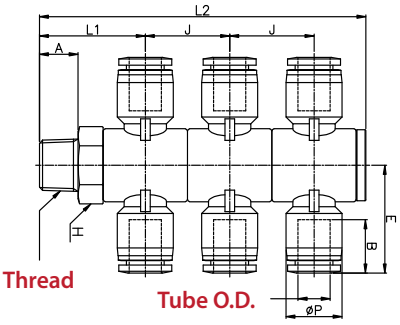

MetricTube Sizes

Model	Tube OD	Thread	Package Qty.	Stock	Hex	Length	Weight
PHT04-01(3)	4mm	1/8" Male BSPT (R)	5	No	14mm	2.74" (69.7mm)	2.01oz (57.0g)
PHT04-02(3)		1/4" Male BSPT (R)			17mm	3.33" (84.7mm)	3.03oz (86.0g)
PHT04-03(3)		3/8" Male BSPT (R)	3		21mm	3.41" (86.7mm)	4.51oz (128g)
PHT04-04(3)		1/2" Male BSPT (R)			24mm	3.83" (97.3mm)	6.59oz (187g)
PHT04-G01(3)		1/8" Male BSPP (G)	5		14mm	2.66" (67.7mm)	1.69oz (48.0g)
PHT04-G02(3)		1/4" Male BSPP (G)			17mm	3.25" (82.7mm)	2.68oz (76.0g)
PHT04-G03(3)		3/8" Male BSPP (G)	3		21mm	3.29" (83.7mm)	4.12oz (117g)
PHT04-G04(3)		1/2" Male BSPP (G)			24mm	3.65" (92.8mm)	6.13oz (174g)
PHT06-01(3)	6mm	1/8" Male BSPT (R)	3	No	14mm	2.74" (69.7mm)	3.24oz (92.0g)
PHT06-02(3)		1/4" Male BSPT (R)			17mm	3.33" (84.7mm)	3.20oz (91.0g)
PHT06-03(3)		3/8" Male BSPT (R)			21mm	3.41" (86.7mm)	4.65oz (132g)
PHT06-04(3)		1/2" Male BSPT (R)			24mm	3.83" (97.3mm)	6.73oz (191g)
PHT06-G01(3)		1/8" Male BSPP (G)			14mm	2.66" (67.7mm)	1.76oz (50.0g)
PHT06-G02(3)		1/4" Male BSPP (G)			17mm	3.25" (82.7mm)	2.78oz (79.0g)
PHT06-G03(3)		3/8" Male BSPP (G)			21mm	3.29" (83.7mm)	4.05oz (115g)
PHT06-G04(3)		1/2" Male BSPP (G)			24mm	3.65" (92.8mm)	6.20oz (176g)
PHT08-01(3)	8mm	1/8" Male BSPT (R)	3	No	14mm	2.74" (69.7mm)	2.36oz (67.0g)
PHT08-02(3)		1/4" Male BSPT (R)			17mm	3.33" (84.7mm)	3.45oz (98.0g)
PHT08-03(3)		3/8" Male BSPT (R)			21mm	3.41" (86.7mm)	4.79oz (136g)
PHT08-04(3)		1/2" Male BSPT (R)	3		24mm	3.83" (97.3mm)	7.01oz (199g)
PHT08-G01(3)		1/8" Male BSPP (G)	3		14mm	2.66" (67.7mm)	1.86oz (53.0g)
PHT08-G02(3)		1/4" Male BSPP (G)			17mm	3.25" (82.7mm)	3.03oz (86.0g)
PHT08-G03(3)		3/8" Male BSPP (G)			21mm	3.29" (83.7mm)	4.26oz (121g)
PHT08-G04(3)		1/2" Male BSPP (G)	2		24mm	3.65" (92.8mm)	6.24oz (177g)
PHT10-01(3)	10mm	1/8" Male BSPT (R)	2	No	14mm	2.74" (69.7mm)	2.92oz (83.0g)
PHT10-02(3)		1/4" Male BSPT (R)			17mm	3.33" (84.7mm)	3.95oz (112g)
PHT10-03(3)		3/8" Male BSPT (R)			21mm	3.41" (86.7mm)	5.36oz (152g)
PHT10-04(3)		1/2" Male BSPT (R)			24mm	3.83" (97.3mm)	7.37oz (209g)
PHT10-G01(3)		1/8" Male BSPP (G)			14mm	2.66" (67.7mm)	2.08oz (59.0g
PHT10-G02(3)		1/4" Male BSPP (G)			17mm	3.25" (82.7mm)	3.06oz (87.0g)
PHT10-G03(3)		3/8" Male BSPP (G)			21mm	3.29" (83.7mm)	4.51oz (128g)
PHT10-G04(3)		1/2" Male BSPP (G)			24mm	3.65" (92.8mm)	6.49oz (184g)
PHT12-02(3)	12mm	1/4" Male BSPT (R)	2	No	17mm	3.33" (84.7mm)	4.69oz (133g)
PHT12-03(3)		3/8" Male BSPT (R)			21mm	3.41" (86.7mm)	6.03oz (171g)
PHT12-04(3)		1/2" Male BSPT (R)			24mm	3.83" (97.3mm)	9.38oz (226g)
PHT12-G02(3)		1/4" Male BSPP (G)			17mm	3.25" (82.7mm)	3.45oz (98.0g)
PHT12-G03(3)		3/8" Male BSPP (G)			21mm	3.29" (83.7mm)	4.83oz (137g)
PHT12-G04(3)		1/2" Male BSPP (G)			24mm	3.65" (92.8mm)	6.84oz (194g)

Swivel Reducer Triple Branch – PKD

Swivel Reducer Triple Branch Fittings provide three push-to-connect ports arranged 90° from a male swivel thread and a larger push-to-connect port.

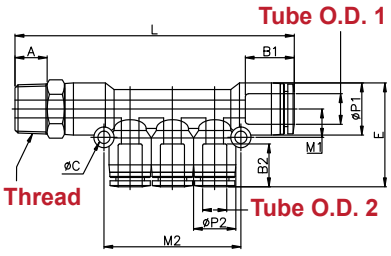

Fractional Tube Sizes

Model	Tube 1 OD	Tube 2 OD	Thread	Package Qty.	Stock	Hex	Length	Weight
PKD3/16-5/32-N1	3/16"	5/32"	1/8" Male NPT	5	No	7/16"	2.74" (69.8mm)	0.92oz (26.1g)
PKD1/4-5/32-N1	1/4"	5/32"	1/8" Male NPT	5	No	1/2"	2.79" (71.1mm)	0.92oz (26.1g)
PKD5/16-5/32-N2	5/16"	5/32"	1/4" Male NPT	5	No	9/16"	3.05" (77.7mm)	1.09oz (31.1g)
PKD5/16-3/16-N2		3/16"					3.14" (80.0mm)	1.22oz (34.8g)
PKD5/16-1/4-N2		1/4"					3.30" (84.0mm)	1.12oz (31.8g)
PKD3/8-1/4-N3	3/8"	1/4"	3/8" Male NPT	5	No	11/16"	3.42" (86.9mm)	2.05oz (58.3g)
PKD3/8-5/16-N3		5/16"					3.79" (96.3mm)	2.19oz (62.3g)

Metric Tube Sizes

Model	Tube 1 OD	Tube 2 OD	Thread	Package Qty.	Stock	Hex	Length	Weight
PKD0604-01	6mm	4mm	1/8" Male BSPT (R)	5	No	12mm	2.83" (72.1mm)	0.70oz (20.0g)
PKD0604-G01			1/8" Male BSPP (G)			14mm	2.72" (69.1mm)	0.88oz (25.0g)
PKD0804-01	8mm	4mm	1/8" Male BSPT (R)	5	No	14mm	2.91" (74.1mm)	0.81oz (23.1g)
PKD0804-G01			1/8" Male BSPP (G)				2.79" (71.1mm)	0.85oz (24.1g)
PKD0804-G02			1/4" Male BSPP (G)			17mm	2.87" (73.1mm)	1.05oz (30.0g)
PKD0806-01		6mm	1/8" Male BSPT (R)			14mm	3.15" (80.1mm)	0.94oz (26.8g)
PKD0806-02			1/4" Male BSPT (R)				3.27" (83.1mm)	1.16oz (33.0g)
PKD0806-G01			1/8" Male BSPP (G)				3.03" (77.1mm)	0.98oz (27.8g)
PKD0806-G02			1/4" Male BSPP (G)			17mm	3.12" (79.1mm)	1.16oz (33.0g)
PKD1006-02	10mm	6mm	1/4" Male BSPT (R)	5	No	17mm	3.52" (89.6mm)	1.42oz (47.0g)
PKD1006-03			3/8" Male BSPT (R)				3.56" (90.6mm)	
PKD1006-G02			1/4" Male BSPP (G)				3.37" (85.6mm)	1.24oz (35.3g)
PKD1006-G03			3/8" Male BSPP (G)			20mm	3.35" (85.1mm)	1.48oz (42.0g)
PKD1008-02		8mm	1/4" Male BSPT (R)			17mm	3.73" (94.9mm)	1.56oz (44.3g)
PKD1008-03			3/8" Male BSPT (R)				3.77" (95.9mm)	1.76oz (50.0g)
PKD1008-G02			1/4" Male BSPP (G)				3.57" (90.9mm)	1.35oz (38.3g)
PKD1008-G03			3/8" Male BSPP (G)			20mm	3.55" (90.4mm)	1.62oz (46.0g)

Resin-Series: Flow Controls

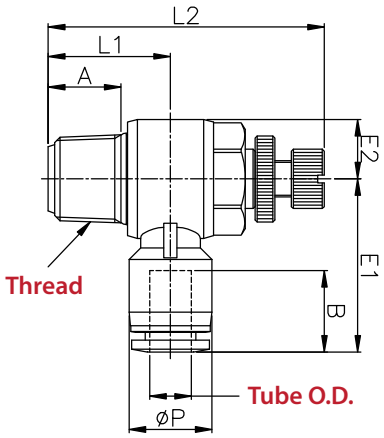

Swivel Flow Control Elbow – NSC

This item allows for the adjustment of flow passing through, enabling installers to manage the speed of pneumatic equipment. Swivel Flow Control Elbows are equipped with a single push-to-connect port arranged 90° apart from a male thread. Swivel Flow Control Elbows are equipped with a knurled thumb-wheel for adjustments along with a locking ring.

Fractional Tube Sizes

Model	Tube OD	Thread	Package Qty.	Stock	Hex	Length	Weight
NSC1/8-U	1/8"	10-32 Male	1	Yes	5/16"	0.84" (21.5mm)	0.28oz (8.00g)
NSC5/32-U	5/32"	10-32 Male	1	Yes	5/16"	1.03" (26.3mm)	0.34oz (9.80g)
NSC5/32-N1		1/8" Male NPT			7/16"	1.20" (30.6mm)	0.66oz (18.8g)
NSC5/32-N2		1/4" Male NPT		No	19/32"	1.35" (34.5mm)	1.22oz (34.8g)
NSC3/16-U	3/16"	10-32 Male	1	No	5/16"	1.04" (26.6mm)	0.34oz (9.70g)
NSC3/16-N1		1/8" Male NPT			7/16"	1.23" (31.4mm)	0.65oz (18.7g)
NSC3/16-N2		1/4" Male NPT			19/32"	1.38" (35.3mm)	1.22oz (34.7g)
NSC3/16-N3		3/8" Male NPT			3/4"	1.53" (39.1mm)	2.31oz (65.7g)
NSC1/4-U	1/4"	10-32 Male	1	Yes	5/16"	1.12" (28.7mm)	0.37oz (10.7g)
NSC1/4-N1		1/8" Male NPT			7/16"	1.25" (32.0mm)	0.69oz (19.7g)
NSC1/4-N2		1/4" Male NPT			19/32"	1.41" (35.9mm)	1.25oz (35.7g)
NSC1/4-N3		3/8" Male NPT			3/4"	1.56" (39.7mm)	2.35oz (66.7g)
NSC1/4-01		1/8" Male BSPT (R)			11mm	1.25" (32.0mm)	0.69oz (19.7g)
NSC1/4-02		1/4" Male BSPT (R)			15mm	1.41" (35.9mm)	1.25oz (35.7g)
NSC1/4-M5		M5 x 0.8			8mm	1.12" (28.7mm)	0.37oz (10.7g)
NSC5/16-N1	5/16"	1/8" Male NPT	1	Yes	7/16"	1.31" (33.3mm)	0.76oz (21.7g)
NSC5/16-N2		1/4" Male NPT			19/32"	1.45" (37.2mm)	1.32oz (37.7g)
NSC5/16-N3		3/8" Male NPT			3/4"	1.59" (40.5mm)	2.45oz (69.7g)
NSC5/16-N4		1/2" Male NPT		No	15/16"	1.81" (46.0mm)	3.63oz (103g)
NSC5/16-01		1/8" Male BSPT (R)			11mm	1.29" (33.0mm)	0.76oz (21.7g)
NSC5/16-02		1/4" Male BSPT (R)			15mm	1.45" (37.0mm)	1.32oz (37.7g)
NSC5/16-03		3/8" Male BSPT (R)			19mm	1.57" (40.0mm)	2.45oz (69.7g)
NSC3/8-N2	3/8"	1/4" Male NPT	1	Yes	19/32"	1.57" (40.1mm)	1.38oz (39.2g)
NSC3/8-N3		3/8" Male NPT			3/4'	1.65" (42.1mm)	2.47oz (70.2g)
NSC3/8-N4		1/2" Male NPT			15/16"	1.85" (47.0mm)	3.84oz (109g)
NSC3/8-02		1/4" Male BSPT (R)			15mm	1.57" (40.1mm)	1.38oz (39.2g)
NSC3/8-03		3/8" Male BSPT (R)			19mm	1.65" (42.1mm)	2.47oz (70.2g)
NSC1/2-N3	1/2"	3/8" Male NPT	1	Yes	3/4"	1.78" (45.3mm)	2.61oz (74.0g)
NSC1/2-N4		1/2" Male NPT			15/16"	1.98" (50.5mm)	4.19oz (119g)

Swivel Flow Control Elbow – NSC (Continued)

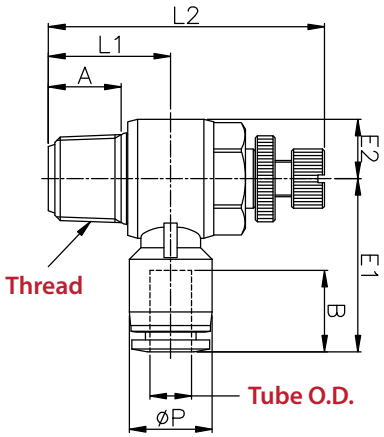

Metric Tube Sizes

Model	Tube OD	Thread	Package Qty.	Stock	Hex	Length	Weight
NSC04-01	4mm	1/8" Male BSPT (R)	1	Yes	11mm	1.19" (30.3mm)	0.70oz (20.0g)
NSC04-02		1/4" Male BSPT (R)			15mm	1.35" (34.3mm)	1.26oz (36.0g)
NSC04-G01		1/8" Male BSPP (G)			8mm	1.19" (30.3mm)	0.70oz (20.0g)
NSC04-G02		1/4" Male BSPP (G)		No	12mm	1.35" (34.3mm)	1.19oz (34.0g)
NSC04-M5		M5 x 0.8		Yes	8mm	0.99" (25.2mm)	0.31oz (9.00g)
NSC06-01	6mm	1/8" Male BSPT (R)	1	Yes	11mm	1.38" (31.2mm)	0.74oz (21.0g)
NSC06-02		1/4" Male BSPT (R)			15mm	1.38" (35.2mm)	1.30oz (37.0g)
NSC06-03		3/8" Male BSPT (R)			19mm	1.52" (38.7mm)	2.46oz (70.0g)
NSC06-04		1/2" Male BSPT (R)		No	24mm	1.76" (44.8mm)	3.80oz (108g)
NSC06-G01		1/8" Male BSPP (G)		Yes	8mm	1.22" (31.2mm)	0.70oz (20.0g)
NSC06-G02		1/4" Male BSPP (G)			12mm	1.38" (35.2mm)	1.26oz (36.0g)
NSC06-G03		3/8" Male BSPP (G)		No	14mm	1.52" (38.7mm)	2.39oz (68.0g)
NSC06-G04		1/2" Male BSPP (G)			17mm	1.76" (44.8mm)	3.63oz (103g)
NSC08-01	8mm	1/8" Male BSPT (R)	1	Yes	11mm	1.29" (32.9mm)	0.77oz (22.0g)
NSC08-02		1/4" Male BSPT (R)			15mm	1.45" (36.9mm)	1.34oz (38.0g)
NSC08-03		3/8" Male BSPT (R)			19mm	1.57" (39.9mm)	2.50oz (71.0g)
NSC08-04		1/2" Male BSPT (R)		No	24mm	1.80" (45.8mm)	3.84oz (109g)
NSC08-G01		1/8" Male BSPP (G)		Yes	8mm	1.29" (32.9mm)	0.77oz (22.0g)
NSC08-G02		1/4" Male BSPP (G)			12mm	1.45" (36.9mm)	1.30oz (37.0g)
NSC08-G03		3/8" Male BSPP (G)			14mm	1.57" (39.9mm)	2.43oz (69.0g)
NSC08-G04		1/2" Male BSPP (G)		No	17mm	1.80" (45.8mm)	3.66oz (104g)
NSC10-01	10mm	1/8" Male BSPT (R)	1	Yes	11mm	1.37" (34.9mm)	0.91oz (26.0g)
NSC10-02		1/4" Male BSPT (R)			15mm	1.53" (38.9mm)	1.48oz (42.0g)
NSC10-03		3/8" Male BSPT (R)			19mm	1.66" (42.2mm)	2.57oz (73.0g)
NSC10-04		1/2" Male BSPT (R)			24mm	1.86" (47.4mm)	3.88oz (110g)
NSC10-G01		1/8" Male BSPP (G)			8mm	1.37" (34.9mm)	0.91oz (26.0g)
NSC10-G02		1/4" Male BSPP (G)		No	12mm	1.53" (38.9mm)	1.44oz (41.0g)
NSC10-G03		3/8" Male BSPP (G)		Yes	14mm	1.66" (42.2mm)	2.50oz (71.0g)
NSC10-G04		1/2" Male BSPP (G)		Yes	17mm	1.86" (47.4mm)	3.73oz (106g)
NSC12-02	12mm	1/4" Male BSPT (R)	1	No	15mm	1.66" (42.3mm)	1.58oz (45.0g)
NSC12-03		3/8" Male BSPT (R)			19mm	1.81" (46.2mm)	2.64oz (75.0g)
NSC12-04		1/2" Male BSPT (R)			24mm	1.97" (50.1mm)	3.98oz (113g)
NSC12-G02		1/4" Male BSPP (G)		No	12mm	1.90" (48.3mm)	1.51oz (43.0g)
NSC12-G03		3/8" Male BSPP (G)			14mm	1.77" (45.2mm)	2.50oz (71.0g)
NSC12-G04		1/2" Male BSPP (G)			17mm	1.97" (50.1mm)	3.80oz (108g)

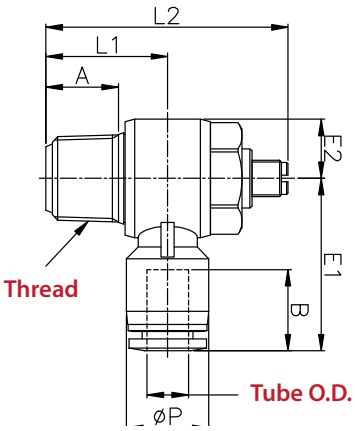

Swivel Flow Control Elbow – NSC (D)

This item allows for the adjustment of volume passing through the fitting. This allows installers to manage the speed of pneumatic equipment. Swivel Flow Control Elbows are equipped with a single push-to-connect port arranged 90° apart from a male thread. Swivel Flow Control Elbows are equipped with a slotted knob for adjustments.

Fractional Tube Sizes

Model	Tube OD	Thread	Package Qty.	Stock	Hex	Length	Weight
NSC1/8-U(D)	1/8"	10-32 Male	1	No	5/16"	0.84" (21.5mm)	0.28oz (8.00g)
NSC5/32-U(D)	5/32"	10-32 Male	1	No	5/16"	1.03" (26.3mm)	0.34oz (9.80g)
NSC5/32-N1(D)		1/8" Male NPT			7/16"	1.20" (30.6mm)	0.59oz (16.8g)
NSC5/32-N2(D)		1/4" Male NPT			19/32"	1.35" (34.5mm)	1.08oz (30.8g)
NSC3/16-U(D)	3/16"	10-32 Male	1	No	5/16"	1.04" (26.6mm)	0.34oz (9.70g)
NSC3/16-N1(D)		1/8" Male NPT			7/16"	1.23" (31.4mm)	0.58oz (16.7g)
NSC3/16-N2(D)		1/4" Male NPT			19/32"	1.38" (35.3mm)	1.08oz (30.7g)
NSC3/16-N3(D)		3/8" Male NPT			3/4"	1.54" (39.2mm)	1.92oz (54.7g)
NSC1/4-U(D)	1/4"	10-32 Male	1	No	5/16"	1.12" (28.7mm)	0.37oz (10.7g)
NSC1/4-N1(D)		1/8" Male NPT			7/16"	1.25" (32.0mm)	0.62oz (17.7g)
NSC1/4-N2(D)		1/4" Male NPT			19/32"	1.41" (35.9mm)	1.11oz (31.7g)
NSC1/4-N3(D)		3/8" Male NPT			3/4"	1.56" (39.7mm)	1.96oz (55.7g)
NSC1/4-01(D)		1/8" Male BSPT (R)			11mm	1.25" (32.0mm)	0.62oz (17.7g)
NSC1/4-02(D)		1/4" Male BSPT (R)			15mm	1.41" (35.9mm)	1.11oz (31.7g)
NSC1/4-M5(D)		M5 x 0.8			8mm	1.12" (28.7mm)	0.37oz (10.7g)
NSC5/16-N1(D)	5/16"	1/8" Male NPT	1	No	7/16"	1.31" (33.3mm)	0.65oz (18.7g)
NSC5/16-N2(D)		1/4" Male NPT			19/32"	1.46" (37.2mm)	1.18oz (33.7g)
NSC5/16-N3(D)		3/8" Male NPT			3/4"	1.59" (40.5mm)	2.07oz (58.7g)
NSC5/16-N4(D)		1/2" Male NPT			15/16"	1.81" (46.0mm)	3.19oz (90.7g)
NSC5/16-01(D)		1/8" Male BSPT (R)			11mm	1.29" (33.0mm)	0.65oz (18.7g)
NSC5/16-02(D)		1/4" Male BSPT (R)			15mm	1.45" (37.0mm)	1.18oz (33.7g)
NSC5/16-03(D)		3/8" Male BSPT (R)			19mm	1.57" (40.0mm)	2.07oz (58.7g)
NSC3/8-N2(D)	3/8"	1/4" Male NPT	1	No	19/32"	1.57" (40.0mm)	1.24oz (35.2g)
NSC3/8-N3(D)		3/8" Male NPT			3/4"	1.65" (42.1mm)	2.08oz (59.2g)
NSC3/8-N4(D)		1/2" Male NPT			15/16"	1.85" (47.0mm)	3.39oz (96.2g)
NSC3/8-02(D)		1/4" Male BSPT (R)			15mm	1.57" (40.1mm)	1.24oz (35.2g)
NSC3/8-03(D)		3/8" Male BSPT (R)			19mm	1.65" (42.1mm)	2.08oz (59.2g)
NSC1/2-N3(D)	1/2"	3/8" Male NPT	1	No	3/4"	1.78" (45.3mm)	2.43oz (69.0g)
NSC1/2-N4(D)		1/2" Male NPT			15/16"	1.98" (50.5mm)	3.73oz (106g)

Swivel Flow Control Elbow – NSC (D) (continued)

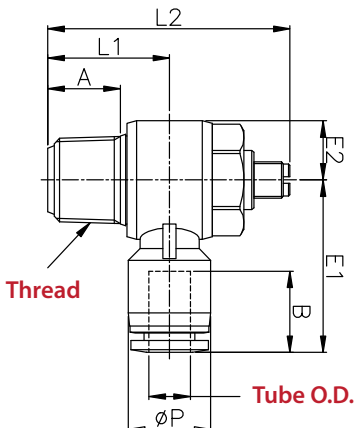

Metric Tube Sizes

Model	Tube OD	Thread	Package Qty.	Stock	Hex	Length	Weight
NSC04-01(D)	4mm	1/8" Male BSPT (R)	1	No	11mm	1.19" (30.3mm)	0.70oz (20.0g)
NSC04-02(D)		1/4" Male BSPT (R)			15mm	1.35" (34.3mm)	1.26oz (36.0g)
NSC04-G01(D)		1/8" Male BSPP (G)		Yes	8mm	1.19" (30.3mm)	0.70oz (20.0g)
NSC04-G02(D)		1/4" Male BSPP (G)		No	12mm	0.42" (36.3mm)	1.19oz (34.0g)
NSC04-M5(D)		M5 x 0.8			8mm	0.99" (25.2mm)	0.31oz (9.00g)
NSC06-01(D)	6mm	1/8" Male BSPT (R)	1	No	11mm	1.22" (31.2mm)	0.74oz (21.0g)
NSC06-02(D)		1/4" Male BSPT (R)			15mm	1.38" (35.2mm)	1.30oz (37.0g)
NSC06-03(D)		3/8" Male BSPT (R)			19mm	1.52" (38.7mm)	2.46oz (70.0g)
NSC06-04(D)		1/2" Male BSPT (R)			24mm	1.76" (44.8mm)	3.80oz (108g)
NSC06-G01(D)		1/8" Male BSPP (G)		Yes	8mm	1.22" (31.2mm)	0.70oz (20.0g)
NSC06-G02(D)		1/4" Male BSPP (G)		No	12mm	1.38" (35.2mm)	1.26oz (36.0g)
NSC06-G03(D)		3/8" Male BSPP (G)			14mm	1.52" (38.7mm)	2.39oz (68.0g)
NSC06-G04(D)		1/2" Male BSPP (G)			17mm	1.76" (44.8mm)	3.63oz (103g)
NSC06-M5(D)		M5 x 0.8		Yes	8mm	1.09" (27.7mm)	0.35oz (10.0g)
NSC08-01(D)	8mm	1/8" Male BSPT (R)	1	No	11mm	1.05" (26.9mm)	0.77oz (22.0g)
NSC08-02(D)		1/4" Male BSPT (R)			15mm	1.45" (36.9mm)	1.34oz (38.0g)
NSC08-03(D)		3/8" Male BSPT (R)			19mm	1.41" (39.9mm)	2.50oz (71.0g)
NSC08-04(D)		1/2" Male BSPT (R)			24mm	1.80" (45.8mm)	3.84oz (109g)
NSC08-G01(D)		1/8" Male BSPP (G)		Yes	8mm	1.29" (32.9mm)	0.77oz (22.0g)
NSC08-G02(D)		1/4" Male BSPP (G)		No	12mm	1.45"(36.9mm)	1.30oz (37.0g)
NSC08-G03(D)		3/8" Male BSPP (G)			14mm	1.57" (39.9mm)	2.43oz (69.0g)
NSC08-G04(D)		1/2" Male BSPP (G)			17mm	1.80" (45.8mm)	3.66oz (104g)
NSC10-01(D)	10mm	1/8" Male BSPT (R)	1	No	11mm	1.37" (34.9mm)	0.91oz (26.0g)
NSC10-02(D)		1/4" Male BSPT (R)			15mm	1.53" (38.9mm)	1.48oz (42.0g)
NSC10-03(D)		3/8" Male BSPT (R)			19mm	1.66" (42.2mm)	2.57oz (73.0g)
NSC10-04(D)		1/2" Male BSPT (R)			24mm	1.86" (47.4mm)	3.88oz (110g)
NSC10-G01(D)		1/8" Male BSPP (G)			8mm	1.37" (34.9mm)	0.91oz (26.0g)
NSC10-G02(D)		1/4" Male BSPP (G)			12mm	1.53" (38.9mm)	1.44oz (41.0g)
NSC10-G03(D)		3/8" Male BSPP (G)			14mm	1.66" (42.2mm)	2.50oz (71.0g)
NSC10-G04(D)		1/2" Male BSPP (G)			17mm	1.86" (47.4mm)	3.73oz (106g)
NSC12-02(D)	12mm	1/4" Male BSPT (R)	1	No	15mm	1.66" (42.3mm)	1.58oz (45.0g)
NSC12-03(D)		3/8" Male BSPT (R)			19mm	1.77" (45.2mm)	2.64oz (75.0g)
NSC12-04(D)		1/2" Male BSPT (R)			24mm	1.97" (50.1mm)	3.98oz (113g)
NSC12-G02(D)		1/4" Male BSPP (G)			12mm	1.66" (42.3mm)	1.51oz (43.0g)
NSC12-G03(D)		3/8" Male BSPP (G)			14mm	1.77" (45.2mm)	2.50oz (71.0g)
NSC12-G04(D)		1/2" Male BSPP (G)			17mm	1.97" (50.1mm)	3.80oz (108g)

Swivel Flow Control Elbow – NSC (DC)

This item allows for the adjustment of volume passing through the fitting. This allows installers to manage the speed of pneumatic equipment. Swivel Flow Control Elbows are equipped with a single push-to-connect port arranged 90° apart from a male thread. Swivel Flow Control Elbows are equipped with a slotted knob for adjustments.

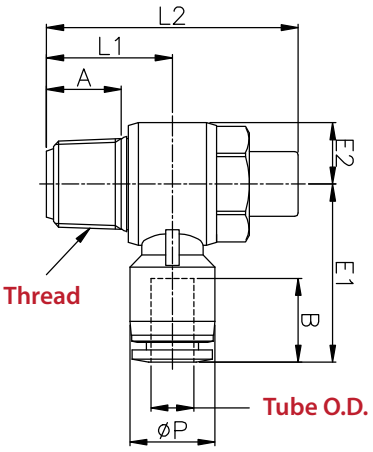

Fractional Tube Sizes

Model	Tube OD	Thread	Package Qty.	Stock	Hex	Length	Weight
NSC1/8-U(DC)	1/8"	10-32 Male	1	No	5/16"	0.84" (21.5mm)	0.28oz (8.00g)
NSC5/32-U(DC)	5/32"	10-32 Male	1	Yes	5/16"	1.03" (26.3mm)	0.35oz (9.80g)
NSC5/32-N1(DC)		1/8" Male NPT			7/16"	1.20" (30.6mm)	0.66oz (18.8g)
NSC5/32-N2(DC)		1/4" Male NPT			19/32"	1.35" (34.5mm)	1.16oz (32.8g)
NSC3/16-U(DC)	3/16"	10-32 Male	1	No	5/16"	1.04" (26.6mm)	0.34oz (9.70g)
NSC3/16-N1(DC)		1/8" Male NPT			7/16"	1.23" (31.4mm)	0.66oz (18.7g)
NSC3/16-N2(DC)		1/4" Male NPT			19/32"	1.38" (35.3mm)	1.15oz (32.7g)
NSC3/16-N3(DC)		3/8" Male NPT			3/4"	1.53" (39.1mm)	2.11oz (59.7g)
NSC1/4-U(DC)	1/4"	10-32 Male	1	Yes	5/16"	1.12" (28.7mm)	0.38oz (10.7g)
NSC1/4-N1(DC)		1/8" Male NPT		No	7/16"	1.25" (32.0mm)	0.70oz (19.7g)
NSC1/4-N2(DC)		1/4" Male NPT		Yes	19/32"	1.41" (35.9mm)	1.19oz (33.7g)
NSC1/4-N3(DC)		3/8" Male NPT		No	3/4"	1.56" (39.7mm)	2.18oz (61.7g)
NSC1/4-01(DC)		1/8" Male BSPT (R)			11mm	1.25" (32.0mm)	0.70oz (19.7g)
NSC1/4-02(DC)		1/4" Male BSPT (R)			15mm	1.41" (35.9mm)	1.19oz (33.7g)
NSC1/4-M5(DC)		M5 x 0.8			8mm	1.12" (28.7mm)	0.62oz (10.7g)
NSC5/16-N1(DC)	5/16"	1/8" Male NPT	1	No	7/16"	1.31" (33.3mm)	0.73oz (20.7g)
NSC5/16-N2(DC)		1/4" Male NPT			19/32"	1.46" (37.2mm)	1.26oz (35.7g)
NSC5/16-N3(DC)		3/8" Male NPT			3/4"	1.59" (40.5mm)	2.28oz (64.7g)
NSC5/16-N4(DC)		1/2" Male NPT			15/16"	1.81" (46.0mm)	3.41oz (96.7g)
NSC5/16-01(DC)		1/8" Male BSPT (R)			11mm	1.29" (33.0mm)	0.73oz (20.7g)
NSC5/16-02(DC)		1/4" Male BSPT (R)			15mm	1.45" (37.0mm)	1.26oz (35.7g)
NSC5/16-03(DC)		3/8" Male BSPT (R)			19mm	1.57" (40.0mm)	2.28oz (64.7g)
NSC3/8-N2(DC)	3/8"	1/4" Male NPT	1	Yes	19/32"	1.57" (40.1mm)	1.31oz (37.2g)
NSC3/8-N3(DC)		3/8" Male NPT		No	3/4"	1.65" (42.1mm)	2.30oz (65.2g)
NSC3/8-N4(DC)		1/2" Male NPT			15/16"	1.85" (47.0mm)	3.61oz (102g)
NSC3/8-02(DC)		1/4" Male BSPT (R)			15mm	1.57" (40.1mm)	1.31oz (37.2g)
NSC3/8-03(DC)		3/8" Male BSPT (R)			19mm	1.65" (42.1mm)	2.30oz (62.2g)
NSC1/2-N3(DC)	1/2"	3/8" Male NPT	1	No	3/4"	1.78" (45.3mm)	2.65oz (75.0g)
NSC1/2-N4(DC)		1/2" Male NPT			15/16"	1.98" (50.5mm)	3.95oz (112g)

Swivel Flow Control Elbow – NSC (DC) (continued)

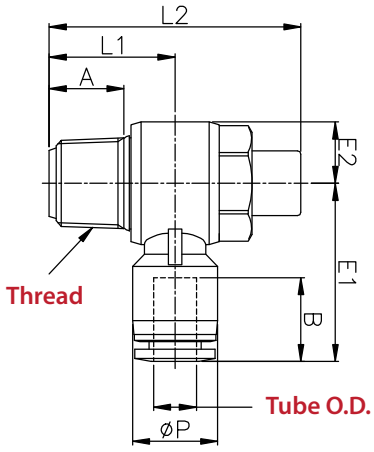

Metric Tube Size

Model	Tube OD	Thread	Package Qty.	Stock	Hex	Length	Weight
NSC04-01(DC)	4mm	1/8" Male BSPT (R)	1	No	8mm	1.19" (30.3mm)	0.56oz (16.0g)
NSC04-02(DC)		1/4" Male BSPT (R)			11mm	1.35" (34.3mm)	1.23oz (35.0g)
NSC04-G01(DC)		1/8" Male BSPP (G)			8mm	1.19" (30.3mm)	0.56oz (16.0g)
NSC04-G02(DC)		1/4" Male BSPP (G)			12mm	1.35" (34.3mm)	1.23oz (35.0g)
NSC04-M5(DC)		M5 x 0.8			8mm	0.99" (25.2mm)	0.24oz (7.00g)
NSC06-01(DC)	6mm	1/8" Male BSPT (R)	1	No	11mm	1.22" (31.2mm)	0.63oz (18.0g)
NSC06-02(DC)		1/4" Male BSPT (R)			15mm	1.38" (35.2mm)	1.16oz (33.0g)
NSC06-03(DC)		3/8" Male BSPT (R)			19mm	1.52" (38.7mm)	2.22oz (63.0g)
NSC06-04(DC)		1/2" Male BSPT (R)			24mm	1.76" (44.8mm)	3.80oz (108g)
NSC06-G01(DC)		1/8" Male BSPP (G)			8mm	1.38" (35.2mm)	0.63oz (18.0g)
NSC06-G02(DC)		1/4" Male BSPP (G)			12mm	1.38" (35.2mm)	1.16oz (33.0g)
NSC06-G03(DC)		3/8" Male BSPP (G)			14mm	1.52" (38.7mm)	2.22oz (63.0g)
NSC06-G04(DC)		1/2" Male BSPP (G)			17mm	1.76" (44.8mm)	3.80oz (108g)
NSC06-M5(DC)		M5 x 0.8			8mm	1.09" (27.7mm)	0.31oz (9.00g)
NSC08-01(DC)	8mm	1/8" Male BSPT (R)	1	No	11mm	1.29" (32.9mm)	0.70oz (20.0g)
NSC08-02(DC)		1/4" Male BSPT (R)			15mm	1.45" (36.9mm)	1.19oz (34.0g)
NSC08-03(DC)		3/8" Male BSPT (R)			19mm	1.53" (39.0mm)	2.25oz (64.0g)
NSC08-04(DC)		1/2" Male BSPT (R)			24mm	1.80" (45.8mm)	3.52oz (100g)
NSC08-G01(DC)		1/8" Male BSPP (G)			8mm	1.29" (32.9mm)	0.70oz (20.0g)
NSC08-G02(DC)		1/4" Male BSPP (G)			12mm	1.45" (36.9mm)	1.19oz (34.0g)
NSC08-G03(DC)		3/8" Male BSPP (G)			14mm	1.57" (39.9mm)	2.25oz (64.0g)
NSC08-G04(DC)		1/2" Male BSPP (G)			17mm	1.80" (45.8mm)	3.52oz (100g)
NSC10-01(DC)	10mm	1/8" Male BSPT (R)	1	No	11mm	1.37" (34.9mm)	0.91oz (26.0g)
NSC10-02(DC)		1/4" Male BSPT (R)			15mm	1.53" (38.9mm)	1.34oz (38.0g)
NSC10-03(DC)		3/8" Male BSPT (R)			19mm	1.66" (42.2mm)	2.22oz (63.0g)
NSC10-04(DC)		1/2" Male BSPT (R)			24mm	1.86" (47.4mm)	3.63oz (103g)
NSC10-G01(DC)		1/8" Male BSPP (G)			8mm	1.37" (34.9mm)	0.91oz (26.0g)
NSC10-G02(DC)		1/4" Male BSPP (G)			12mm	1.53" (38.9mm)	1.34oz (38.0g)
NSC10-G03(DC)		3/8" Male BSPP (G)			14mm	1.66" (42.2mm)	2.22oz (63.0g)
NSC10-G04(DC)		1/2" Male BSPP (G)			17mm	1.86" (47.4mm)	3.63oz (103g)
NSC12-02(DC)	12mm	1/4" Male BSPT (R)	1	No	15mm	1.66" (42.3mm)	1.48oz (42.0g)
NSC12-03(DC)		3/8" Male BSPT (R)			19mm	1.77" (45.2mm)	2.29oz (65.0g)
NSC12-04(DC)		1/2" Male BSPT (R)			24mm	1.97" (50.1mm)	3.66oz (104g)
NSC12-G02(DC)		1/4" Male BSPP (G)			12mm	1.66" (42.3mm)	1.48oz (42.0g)
NSC12-G03(DC)		3/8" Male BSPP (G)			14mm	1.77" (45.2mm)	2.29oz (65.0g)
NSC12-G04(DC)		1/2" Male BSPP (G)			17mm	1.97" (50.1mm)	3.66oz (104g)

Technifit™ Push-to-Connect Fittings

Swivel Flow Control Dual Axis Swivel Body Elbow – NSS

This item allows for the adjustment of volume passing through the fitting. This allows installers to manage the speed of pneumatic equipment. These fittings are equipped with a single offset push-to-connect port arranged parallel from a male thread, along with a knurled thumb-knob for adjustment.

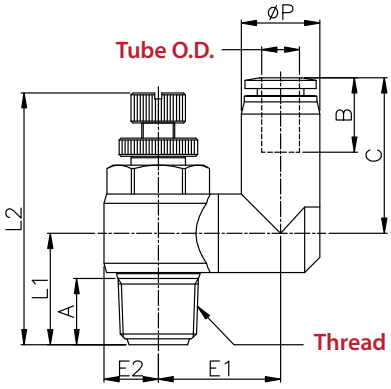

Fractional Tube Sizes

Model	Tube OD	Thread	Package Qty.	Stock	Hex	Length	Weight
NSS04-01	4mm	1/8" Male BSPT (R)	1	No	11mm	1.39" (35.4mm)	0.68oz (19.4g)
NSS04-02		1/4" Male BSPT (R)			15mm	1.52" (38.7mm)	1.27oz (36.1g)
NSS04-G01		1/8" Male BSPP (G)			8mm	1.40" (35.6mm)	0.32oz (9.20g)
NSS04-G02		1/4" Male BSPP (G)			12mm	1.49" (37.9mm)	0.68oz (19.4g)
NSS04-M5		M5 x 0.8			8mm	1.17" (29.9mm)	0.32oz (9.20g)
NSS06-01	6mm	1/8" Male BSPT (R)	1	Yes	11mm	1.55" (39.6mm)	0.74oz (21.1g)
NSS06-02		1/4" Male BSPT (R)			15mm	1.74" (44.3mm)	1.36oz (38.7g)
NSS06-03		3/8" Male BSPT (R)		No	19mm	1.88" (47.8mm)	2.47oz (70.2g)
NSS06-G01		1/8" Male BSPP (G)			8mm	1.52" (38.7mm)	0.74oz (21.1g)
NSS06-G02		1/4" Male BSPP (G)			12mm	1.71" (43.5mm)	1.36oz (38.7g)
NSS06-G03		3/8" Male BSPP (G)			14mm	1.86" (47.3mm)	2.47oz (70.2g)
NSS06-G04		1/2" Male BSPP (G)			N/A	N/A	N/A
NSS06-M5		M5 x 0.8		Yes	8mm	1.25" (32.0mm)	0.35oz (10.2g)
NSS08-01	8mm	1/8" Male BSPT (R)	1	Yes	11mm	1.61" (40.9mm)	0.77oz (22.1g)
NSS08-02		1/4" Male BSPT (R)			15mm	1.83" (46.7mm)	1.39oz (39.8g)
NSS08-03		3/8" Male BSPT (R)		No	19mm	2.03" (51.7mm)	2.51oz (71.4g)
NSS08-04		1/2" Male BSPT (R)		Yes	24mm	2.20" (55.9mm)	3.88oz (110g)
NSS08-G01		1/8" Male BSPP (G)			8mm	1.55" (39.6mm)	0.77oz (22.1g)
NSS08-G02		1/4" Male BSPP (G)			12mm	1.80" (45.9mm)	1.40oz (39.8g)
NSS08-G03		3/8" Male BSPP (G)			14mm	1.97" (50.1mm)	2.51oz (71.4g)
NSS08-G04		1/2" Male BSPP (G)			17mm	2.05" (52.3mm)	3.88oz (110g)
NSS10-02	10mm	1/4" Male BSPT (R)	1	Yes	15mm	1.93" (49.1mm)	1.48oz (42.2g)
NSS10-03		3/8" Male BSPT (R)		No	19mm	2.12" (54.1mm)	2.59oz (73.5g)
NSS10-04		1/2" Male BSPT (R)			24mm	2.35" (59.8mm)	3.95oz (112g)
NSS10-G02		1/4" Male BSPP (G)			12mm	1.90" (48.3mm)	1.48oz (42.2g)
NSS10-G03		3/8" Male BSPP (G)			14mm	2.06" (52.5mm)	1.53oz (73.5g)
NSS10-G04		1/2" Male BSPP (G)			17mm	2.20" (56.0mm)	3.95oz (112g)
NSS12-02	12mm	1/4" Male BSPT (R)	1	No	15mm	2.03" (51.8mm)	1.55oz (44.1g)
NSS12-03		3/8" Male BSPT (R)		Yes	19mm	2.23" (56.8mm)	2.78oz (79.0g)
NSS12-04		1/2" Male BSPT (R)			24mm	2.46" (62.5mm)	4.05oz (115g)
NSS12-G02		1/4" Male BSPP (G)		No	12mm	2.00" (51.0mm)	1.55oz (44.1g)
NSS12-G03		3/8" Male BSPP (G)			14mm	2.17" (55.2mm)	2.78oz (79.0g)
NSS12-G04		1/2" Male BSPP (G)			17mm	2.31" (58.7mm)	4.05oz (115g)

Swivel Flow Control Dual Axis Swivel Body Elbow – NSS (D)

This item allows for the adjustment of flow passing through, enabling installers to manage the speed of pneumatic equipment. These fittings are equipped with a single offset push-to-connect port arranged parallel from a male thread, along with a slotted knob for adjustment.

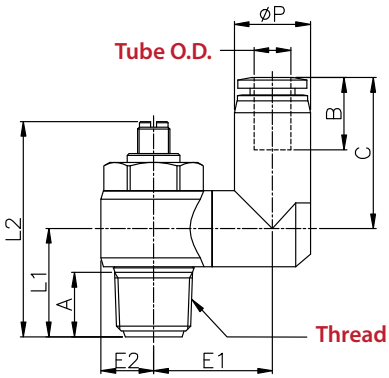

Metric Tube Sizes

Model	Tube OD	Thread	Package Qty.	Stock	Hex	Length	Weight
NSS04-01(D)	4mm	1/8" Male BSPT (R)	1	No	11mm	1.39" (35.4mm)	0.68oz (19.4g)
NSS04-02(D)		1/4" Male BSPT (R)			15mm	1.52" (38.7mm)	1.27oz (36.1g)
NSS04-G01(D)		1/8" Male BSPP (G)			8mm	1.40" (35.6mm)	0.70oz (20.0g)
NSS04-G02(D)		1/4" Male BSPP (G)			12mm	1.49" (37.9mm)	1.19oz (34.0g)
NSS04-M5(D)		M5 x 0.8			8mm	1.17" (29.9mm)	0.32oz (9.20g)
NSS06-01(D)	6mm	1/8" Male BSPT (R)	1	No	11mm	1.55" (39.6mm)	0.74oz (21.1g)
NSS06-02(D)		1/4" Male BSPT (R)			15mm	1.74" (44.3mm)	1.36oz (38.7g)
NSS06-03(D)		3/8" Male BSPT (R)			19mm	1.88" (47.8mm)	2.47oz (70.2g)
NSS06-G01(D)		1/8" Male BSPP (G)			8mm	1.52" (38.7mm)	0.70oz (20.0g)
NSS06-G02(D)		1/4" Male BSPP (G)			12mm	1.71" (43.5mm)	1.26oz (36.0g)
NSS06-G03(D)		3/8" Male BSPP (G)			14mm	1.86" (47.3mm)	2.39oz (68.0g)
NSS06-M5(D)		M5 x 0.8			8mm	1.25" (32.0mm)	0.35oz (10.2g)
NSS08-01(D)	8mm	1/8" Male BSPT (R)	1	No	11mm	1.59" (40.5mm)	0.77oz (22.1g)
NSS08-02(D)		1/4" Male BSPT (R)			15mm	1.83" (46.7mm)	1.40oz (39.8g)
NSS08-03(D)		3/8" Male BSPT (R)			19mm	2.03" (51.7mm)	2.51oz (71.4g)
NSS08-04(D)		1/2" Male BSPT (R)			24mm	2.20" (55.9mm)	3.88oz (110g)
NSS08-G01(D)		1/8" Male BSPP (G)			8mm	1.55" (39.6mm)	0.77oz (22.0g)
NSS08-G02(D)		1/4" Male BSPP (G)			12mm	1.80" (45.9mm)	1.30oz (37.0g)
NSS08-G03(D)		3/8" Male BSPP (G)			14mm	1.97" (50.1mm)	2.43oz (69.0g)
NSS08-G04(D)		1/2" Male BSPP (G)			17mm	2.05" (52.3mm)	3.66oz (104g)
NSS10-02(D)	10mm	1/4" Male BSPT (R)	1	No	15mm	1.93" (49.1mm)	1.48oz (42.2g)
NSS10-03(D)		3/8" Male BSPT (R)			19mm	2.12" (54.1mm)	2.59oz (73.5g)
NSS10-04(D)		1/2" Male BSPT (R)			24mm	2.35" (59.8mm)	3.95oz (112g)
NSS10-G02(D)		1/4" Male BSPP (G)			12mm	1.90" (48.3mm)	3.88oz (41.0g)
NSS10-G03(D)		3/8" Male BSPP (G)			14mm	2.06" (52.5mm)	1.44oz (71.0g)
NSS10-G04(D)		1/2" Male BSPP (G)			17mm	2.20" (56.0mm)	3.74oz (106g)
NSS12-02(D)	12mm	1/4" Male BSPT (R)	1	No	15mm	2.03" (51.8mm)	1.55oz (44.1g)
NSS12-03(D)		3/8" Male BSPT (R)			19mm	2.23" (56.8mm)	2.78oz (79.0g)
NSS12-04(D)		1/2" Male BSPT (R)			24mm	2.46" (62.5mm)	4.05oz (115g)
NSS12-G02(D)		1/4" Male BSPP (G)			12mm	2.00" (51.0mm)	1.51oz (43.0g)
NSS12-G03(D)		3/8" Male BSPP (G)			14mm	2.17" (55.2mm)	2.50oz (71.0g)
NSS12-G04(D)		1/2" Male BSPP (G)			17mm	2.31" (58.7mm)	3.80oz (108g)

Technifit™ Push-to-Connect Fittings

Swivel Flow Control Dual Axis Swivel Body Elbow – NSS (DC)

This item allows for the adjustment of flow passing through the fitting. This allows installers to manage the speed of pneumatic equipment. These fittings are equipped with a single offset push-to-connect port arranged parallel from a male thread, along with a recessed slotted knob for adjustment.

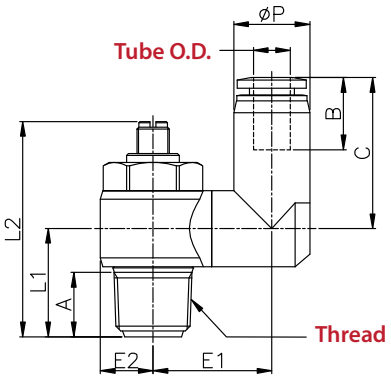

Metric Tube Sizes

Model	Tube OD	Thread	Package Qty.	Stock	Hex	Length	Weight
NSS04-01(DC)	4mm	1/8" Male BSPT (R)	1	No	11mm	1.39" (35.4mm)	0.56oz (16.0g)
NSS04-02(DC)		1/4" Male BSPT (R)			15mm	1.52" (38.7mm)	1.22oz (35.0g)
NSS04-G01(DC)		1/8" Male BSPP (G)			8mm	1.40" (35.6mm)	0.56oz (16.0g)
NSS04-G02(DC)		1/4" Male BSPP (G)			12mm	1.49" (37.9mm)	1.23oz (35.0g)
NSS04-M5(DC)		M5 x 0.8			8mm	1.17" (29.9mm)	0.24oz (7.00g)
NSS06-01(DC)	6mm	1/8" Male BSPT (R)	1	No	11mm	1.55" (39.6mm)	0.63oz (18.0g)
NSS06-02(DC)		1/4" Male BSPT (R)			15mm	1.74" (44.3mm)	1.16oz (33.0g)
NSS06-03(DC)		3/8" Male BSPT (R)			19mm	1.88" (47.8mm)	2.22oz (63.0g)
NSS06-G01(DC)		1/8" Male BSPP (G)			8mm	1.52" (38.7mm)	0.63oz (18.0g)
NSS06-G02(DC)		1/4" Male BSPP (G)			12mm	1.71" (43.5mm)	1.16oz (33.0g)
NSS06-G03(DC)		3/8" Male BSPP (G)			14mm	1.86" (47.3mm)	2.22oz (63.0g)
NSS06-M5(DC)		M5 x 0.8			8mm	1.25" (32.0mm)	0.31oz (9.00g)
NSS08-01(DC)	8mm	1/8" Male BSPT (R)	1	No	11mm	1.59" (40.5mm)	0.70oz (20.0g)
NSS08-02(DC)		1/4" Male BSPT (R)			15mm	1.83" (46.7mm)	1.19oz (34.0g)
NSS08-03(DC)		3/8" Male BSPT (R)			19mm	2.03" (51.7mm)	2.25oz (64.0g)
NSS08-04(DC)		1/2" Male BSPT (R)			24mm	2.20" (55.9mm)	3.52oz (100g)
NSS08-G01(DC)		1/8" Male BSPP (G)			8mm	1.55" (39.6mm)	0.70oz (20.0g)
NSS08-G02(DC)		1/4" Male BSPP (G)			12mm	1.80" (45.9mm)	1.19oz (34.0g)
NSS08-G03(DC)		3/8" Male BSPP (G)			14mm	1.97" (50.1mm)	2.25oz (64.0g)
NSS08-G04(DC)		1/2" Male BSPP (G)			17mm	2.05" (52.3mm)	3.52oz (100g)
NSS10-02(DC)	10mm	1/4" Male BSPT (R)	1	No	15mm	1.93" (49.1mm)	1.34oz (38.0g)
NSS10-03(DC)		3/8" Male BSPT (R)			19mm	2.12" (54.1mm)	2.22oz (63.0g)
NSS10-04(DC)		1/2" Male BSPT (R)			24mm	2.35" (59.8mm)	3.63oz (103g)
NSS10-G02(DC)		1/4" Male BSPP (G)			12mm	1.90" (48.3mm)	1.34oz (38.0g)
NSS10-G03(DC)		3/8" Male BSPP (G)			14mm	2.06" (52.5mm)	2.22oz (63.0g)
NSS10-G04(DC)		1/2" Male BSPP (G)			17mm	2.20" (56.0mm)	3.52oz (100g)
NSS12-02(DC)	12mm	1/4" Male BSPT (R)	1	No	15mm	2.03" (51.8mm)	1.48oz (42.0g)
NSS12-03(DC)		3/8" Male BSPT (R)			19mm	2.36" (56.8mm)	2.29oz (65.0g)
NSS12-04(DC)		1/2" Male BSPT (R)			24mm	2.46" (62.5mm)	3.66oz (104g)
NSS12-G02(DC)		1/4" Male BSPP (G)			12mm	2.00" (51.0mm)	1.48oz (42.0g)
NSS12-G03(DC)		3/8" Male BSPP (G)			14mm	2.17" (55.2mm)	2.29oz (65.0g)
NSS12-G04(DC)		1/2" Male BSPP (G)			17mm	2.31" (58.7mm)	3.66oz (104g)

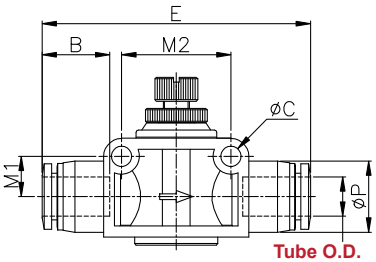

Flow Control Inline Union – NSF

This item allows for the adjustment of flow passing through, enabling installers to manage the speed of pneumatic equipment. These fittings are equipped with a two opposing push-to-connect ports, along with a thumb-knob for adjustment.

Fractional Tube Sizes

Model	Tube 1 OD	Tube 2 OD	Package Qty.	Stock	Length	Weight
NSF5/32	5/32"	5/32"	1	Yes	1.65" (42.1mm)	0.47oz (13.6g)
NSF3/16	3/16"	3/16"	1	Yes	1.68" (42.9mm)	0.47oz (13.4g)
NSF1/4	1/4"	1/4"	1	Yes	1.97" (50.1mm)	1.03oz (29.4g)
NSF5/16	5/16"	5/16"	1	Yes	2.22" (56.6mm)	1.67oz (47.4g)
NSF3/8	3/8"	3/8"	1	Yes	2.48" (63.0mm)	2.97oz (84.4g)
NSF1/2	1/2"	1/2"	1	Yes	2.90" (73.9mm)	4.37oz (124g)

Metric Tube Sizes

Model	Tube 1 OD	Tube 2 OD	Package Qty.	Stock	Length	Weight
NSF04	4mm	4mm	1	No	1.65" (42.0mm)	0.45oz (13.0g)
NSF06	6mm	6mm	1	Yes	1.94" (49.5mm)	0.98oz (28.0g)
NSF08	8mm	8mm	1	No	2.22" (56.5mm)	1.58oz (45.0g)
NSF10	10mm	10mm	1	Yes	2.48" (63.1mm)	2.96oz (84.0g)
NSF12	12mm	12mm	1	Yes	2.89" (73.5mm)	4.33oz (123g)

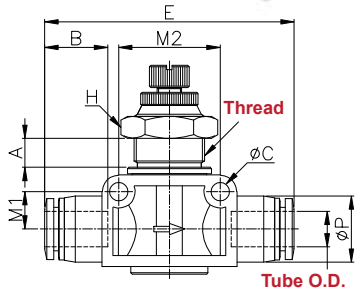

Flow Control Bulkhead Inline Union – NSFB

This item allows for the adjustment of flow passing through, enabling installers to manage the speed of pneumatic equipment. These fittings are equipped with a two opposing push-to-connect ports, along with a thumb-knob for adjustment. A threaded stem along with a nut allow for mounting through panels.

Fractional Tube Sizes

Model	Tube 1 OD	Tube 2 OD	Package Qty.	Stock	Hex	Length	Weight
NSFB5/32	5/32"	5/32"	1	No	12mm	1.65" (42.1mm)	0.63oz (18.0g)
NSFB3/16	3/16"	3/16"	1	No	12mm	1.68" (42.9mm)	0.63oz (18.0g)
NSFB1/4	1/4"	1/4"	1	No	17mm	1.97" (50.1mm)	1.30oz (37.0g)
NSFB5/16	5/16"	5/16"	1	Yes	19mm	2.22" (56.6mm)	2.36oz (67.0g)
NSFB3/8	3/8"	3/8"	1	No	22mm	2.48" (63.0mm)	3.88oz (110g)
NSFB1/2	1/2"	1/2"	1	No	24mm	2.90" (73.9mm)	5.32oz (151g)

Metric Tube Sizes

Model	Tube 1 OD	Tube 2 OD	Package Qty.	Stock	Hex	Length	Weight
NSFB04	4mm	4mm	1	No	12mm	1.65" (42.0mm)	0.63oz (18.0g)
NSFB06	6mm	6mm	1	No	17mm	1.94" (49.5mm)	1.30oz (37.0g)
NSFB08	8mm	8mm	1	No	19mm	2.22" (56.5mm)	2.36oz (67.0g)
NSFB10	10mm	10mm	1	No	22mm	2.48" (63.1mm)	3.88oz (110g)
NSFB12	12mm	12mm	1	No	24mm	2.89" (73.5mm)	5.32oz (151g)

Swivel Flow Control Elbow with Releasing Residual Pressure Valve – NSCP

These Swivel Flow Control Elbows feature a single push-to-connect port arranged 90° from a swivel male thread. A valve allows users to release residual pressure in the downward pneumatic circuit

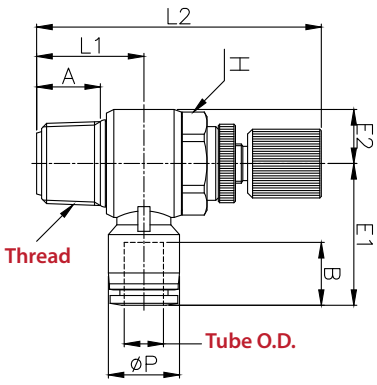

Fractional Tube Sizes

Model	Tube OD	Thread	Package Qty.	Stock	Hex	Length	Weight
NSCP5/32-N1	5/32"	1/8" Male NPT	1	No	7/16"	2.26" (57.6mm)	NA
NSCP5/32-N2		1/4" Male NPT			19/32"	2.24" (57.1mm)	
NSCP3/16-N1	3/16"	1/8" Male NPT	1	No	7/16"	2.26" (57.6mm)	NA
NSCP3/16-N2		1/4" Male NPT			19/32"	2.24" (57.1mm)	
NSCP3/16-N3		3/8" Male NPT			3/4"	2.53" (64.4mm)	
NSCP1/4-N1	1/4"	1/8" Male NPT	1	No	7/16"	2.26" (57.6mm)	NA
NSCP1/4-N2		1/4" Male NPT			19/32"	2.24" (57.1mm)	
NSCP1/4-N3		3/8" Male NPT			3/4"	2.53" (64.4mm)	
NSCP1/4-01		1/8" Male BSPT (R)			11mm	2.26" (57.6mm)	
NSCP1/4-02		1/4" Male BSPT (R)			15mm	2.24" (57.1mm)	
NSCP5/16-N1	5/16"	1/8" Male NPT	1	No	7/16"	2.26" (57.6mm)	NA
NSCP5/16-N2		1/4" Male NPT			19/32"	2.24" (57.1mm)	
NSCP5/16-N3		3/8" Male NPT			3/4"	2.53" (64.4mm)	
NSCP5/16-N4		1/2" Male NPT			15/16"	2.77" (70.6mm)	
NSCP5/16-01		1/8" Male BSPT (R)			11mm	2.26" (57.6mm)	
NSCP5/16-02		1/4" Male BSPT (R)			15mm	2.24" (57.1mm)	
NSCP5/16-03		3/8" Male BSPT (R)			19mm	2.53" (64.4mm)	
NSCP3/8-N2	3/8"	1/4" Male NPT	1	No	19/32"	2.24" (57.1mm)	NA
NSCP3/8-N3		3/8" Male NPT			3/4"	2.53" (64.4mm)	
NSCP3/8-N4		1/2" Male NPT			15/16"	2.77" (70.6mm)	
NSCP3/8-02		1/4" Male BSPT (R)			15mm	2.24" (57.1mm)	
NSCP3/8-03		3/8" Male BSPT (R)			19mm	2.53" (64.4mm)	
NSCP1/2-N3	1/2	3/8" Male NPT	1	No	3/4"	2.53" (64.4mm)	NA
NSCP1/2-N4		1/2" Male NPT			15/16"	2.77" (70.6mm)	

Swivel Flow Control Elbow with Releasing Residual Pressure Valve – NSCP (Continued)

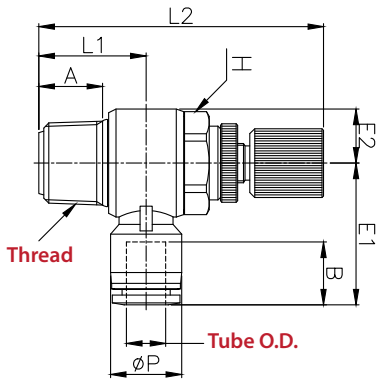

Metric Tube Sizes

Model	Tube OD	Thread	Package Qty.	Stock	Hex	Length	Weight
NSCP04-01	4mm	1/8" Male BSPT (R)	1	No	11mm	2.26" (57.6mm)	1.02oz (29.1g)
NSCP04-02		1/4" Male BSPT (R)			15mm	2.24" (57.1mm)	1.41oz (40.2g)
NSCP04-G01		1/8" Male BSPP (G)			11mm	2.26" (57.6mm)	1.06oz (30.3g)
NSCP04-G02		1/4" Male BSPP (G)			12mm	2.24" (57.1mm)	1.37oz (39.0g)
NSCP06-01	6mm	1/8" Male BSPT (R)	1	No	11mm	2.26" (57.6mm)	1.05oz (29.8g)
NSCP06-02		1/4" Male BSPT (R)			15mm	2.24" (57.1mm)	1.44oz (41.1g)
NSCP06-03		3/8" Male BSPT (R)			19mm	2.53" (64.4mm)	2.31oz (65.7g)
NSCP06-04		1/2" Male BSPT (R)			24mm	2.77" (70.6mm)	3.63oz (103g)
NSCP06-G01		1/8" Male BSPP (G)			11mm	2.26" (57.6mm)	1.09oz (31.1g)
NSCP06-G02		1/4" Male BSPP (G)			12mm	2.24" (57.1mm)	1.40oz (39.7g)
NSCP06-G03		3/8" Male BSPP (G)			14mm	2.53" (64.4mm)	2.24oz (63.7g)
NSCP06-G04		1/2" Male BSPP (G)			17mm	2.77" (70.6mm)	3.43oz (97.5g)
NSCP08-01	8mm	1/8" Male BSPT (R)	1	No	11mm	2.26" (57.6mm)	1.08oz (30.8g)
NSCP08-02		1/4" Male BSPT (R)			15mm	2.24" (57.1mm)	1.48oz (42.1g)
NSCP08-03		3/8" Male BSPT (R)			19mm	2.53" (64.4mm)	2.34oz (66.6g)
NSCP08-04		1/2" Male BSPT (R)			24mm	2.77" (70.6mm)	3.63oz (103g)
NSCP08-G01		1/8" Male BSPP (G)			11mm	2.26" (57.6mm)	1.12oz (32.0g)
NSCP08-G02		1/4" Male BSPP (G)			12mm	2.24" (57.1mm)	1.43oz (40.8g)
NSCP08-G03		3/8" Male BSPP (G)			14mm	2.53" (64.4mm)	2.28oz (64.7g)
NSCP08-G04		1/2" Male BSPP (G)			17mm	2.77" (70.6mm)	3.47oz (98.5g)
NSCP10-01	10mm	1/8" Male BSPT (R)	1	No	11mm	2.26" (57.6mm)	1.14oz (32.6g)
NSCP10-02		1/4" Male BSPT (R)			15mm	2.24" (57.1mm)	1.54oz (43.9g)
NSCP10-03		3/8" Male BSPT (R)			19mm	2.53" (64.4mm)	2.40oz (68.3g)
NSCP10-04		1/2" Male BSPT (R)			24mm	2.77" (70.6mm)	3.70oz (105g)
NSCP10-G01		1/8" Male BSPP (G)			11mm	2.26" (57.6mm)	1.19oz (33.8g)
NSCP10-G02		1/4" Male BSPP (G)			12mm	2.24" (57.1mm)	1.49oz (42.5g)
NSCP10-G03		3/8" Male BSPP (G)			14mm	2.53" (64.4mm)	2.33oz (66.3g)
NSCP10-G04		1/2" Male BSPP (G)			17mm	2.77" (70.6mm)	3.52oz (99.8g)
NSCP12-02	12mm	1/8" Male BSPT (R)	1	No	15mm	2.24" (57.1mm)	1.65oz (46.9g)
NSCP12-03		1/4" Male BSPT (R)			19mm	2.53" (64.4mm)	2.50oz (71.1g)
NSCP12-04		3/8" Male BSPT (R)			24mm	2.77" (70.6mm)	3.77oz (107g)
NSCP12-G02		1/4" Male BSPP (G)			12mm	2.24" (57.1mm)	1.60oz (45.4g)
NSCP12-G03		3/8" Male BSPP (G)			14mm	2.53" (64.4mm)	2.43oz (69.0g)
NSCP12-G04		1/2" Male BSPP (G)			17mm	2.77" (70.6mm)	3.59oz (102g)

Technifit™ Push-to-Connect Fittings

Swivel Flow Control with Releasing Residual Pressure Valve – NSSP
These Swivel Flow Control Elbows feature a single offset push-to-connect port arranged parallel to a swivel male thread. A valve allows users to release residual pressure in the downward pneumatic circuit.

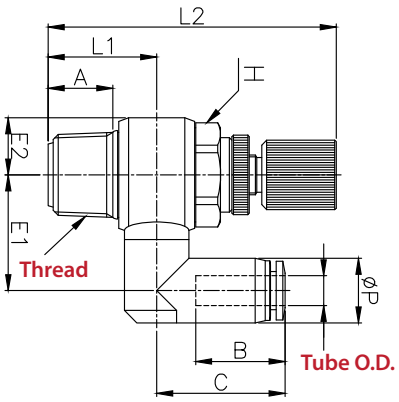

Metric Tube Sizes

Model	Tube OD	Thread	Package Qty.	Stock	Hex	Length	Weight
NSSP04-01	4mm	1/8" Male BSPT (R)	1	No	11mm	2.26" (57.6mm)	NA
NSSP04-02		1/4" Male BSPT (R)			15mm	2.24" (57.1mm)	
NSSP04-G01		1/8" Male BSPP (G)			11mm	2.26" (57.6mm)	
NSSP04-G02		1/4" Male BSPP (G)			12mm	2.24" (57.1mm)	
NSSP06-01	6mm	1/8" Male BSPT (R)	1	No	11mm	2.26" (57.6mm)	NA
NSSP06-02		1/4" Male BSPT (R)			15mm	2.24" (57.1mm)	
NSSP06-03		3/8" Male BSPT (R)			19mm	2.53" (64.4mm)	
NSSP06-G01		1/8" Male BSPP (G)			11mm	2.26" (57.6mm)	
NSSP06-G02		1/4" Male BSPP (G)			12mm	2.24" (57.1mm)	
NSSP06-G03		3/8" Male BSPP (G)			14mm	2.53" (64.4mm)	
NSSP08-01	8mm	1/8" Male BSPT (R)	1	No	11mm	2.26" (57.6mm)	NA
NSSP08-02		1/4" Male BSPT (R)			15mm	2.24" (57.1mm)	
NSSP08-03		3/8" Male BSPT (R)			19mm	2.53" (64.4mm)	
NSSP08-04		1/2" Male BSPT (R)			24mm	2.77" (70.6mm)	
NSSP08-G01		1/8" Male BSPP (G)			11mm	2.26" (57.6mm)	
NSSP08-G02		1/4" Male BSPP (G)			12mm	2.24" (57.1mm)	
NSSP08-G03		3/8" Male BSPP (G)			14mm	2.53" (64.4mm)	
NSSP08-G04		1/2" Male BSPP (G)			17mm	2.77" (70.6mm)	
NSSP10-02	10mm	1/4" Male BSPT (R)	1	No	15mm	2.24" (57.1mm)	NA
NSSP10-03		3/8" Male BSPT (R)			19mm	2.53" (64.4mm)	
NSSP10-04		1/2" Male BSPT (R)			24mm	2.77" (70.6mm)	
NSSP10-G02		1/4" Male BSPP (G)			12mm	2.24" (57.1mm)	
NSSP10-G03		3/8" Male BSPP (G)			14mm	2.53" (64.4mm)	
NSSP10-G04		1/2" Male BSPP (G)			17mm	2.77" (70.6mm)	
NSSP12-02	12mm	1/8" Male BSPT (R)	1	No	15mm	2.24" (57.1mm)	NA
NSSP12-03		1/4" Male BSPT (R)			19mm	2.53" (64.4mm)	
NSSP12-04		3/8" Male BSPT (R)			24mm	2.77" (70.6mm)	
NSSP12-G02		1/4" Male BSPP (G)			12mm	2.24" (57.1mm)	
NSSP12-G03		3/8" Male BSPP (G)			14mm	2.53" (64.4mm)	
NSSP12-G04		1/2" Male BSPP (G)			17mm	2.77" (70.6mm)	

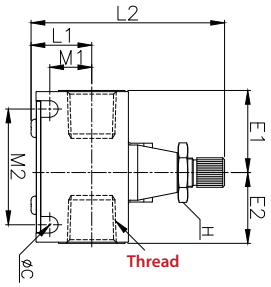

Metal Body Flow Control – NSFF

Metal Body Flow Controls feature a sturdy, rugged construction with opposing threads.

BSP Thread Sizes

Model	Thread	Package Qty.	Stock	Hex	Length	Weight
NSFF-01	1/8" Male BSPT (R)	1	No	12mm	2.15" (54.8mm)	2.99oz (84.9g)
NSFF-02	1/4" Male BSPT (R)	1	No	12mm	2.27" (57.7mm)	4.09oz (116g)
NSFF-03	3/8" Male BSPT (R)	1	No	12mm	2.74" (69.7mm)	4.16oz (118g)
NSFF-04	1/2" Male BSPT (R)	1	No	29mm	3.03" (77.0mm)	6.20oz (176g)

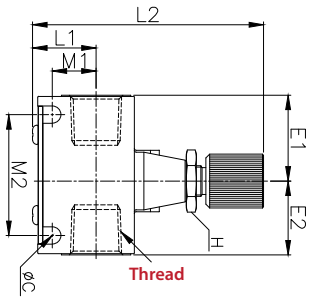

Metal Body Flow Control with Exhaust Valve – NSFP

Metal Body Flow Controls feature a sturdy, rugged construction, a venting function, and opposing threads.

BSP Thread Sizes

Model	Thread	Package Qty.	Stock	Hex	Length	Weight
NSFP-01	1/8" Female BSPT (R)	1	No	12mm	2.44" (62.2mm)	3.06oz (86.8g)
NSFP-02	1/4" Female BSPT (R)	1	No	14mm	2.57" (65.5mm)	4.16oz (118g)
NSFP-03	3/8" Female BSPT (R)	1	No	14mm	3.06" (77.9mm)	4.23oz (120g)
NSFP-04	1/2" Female BSPT (R)	1	No	29mm	3.17" (80.6mm)	6.45oz (183g)

Technifit™ Push-to-Connect Fittings

Flow Control with Quick Exhaust Valve – ESC

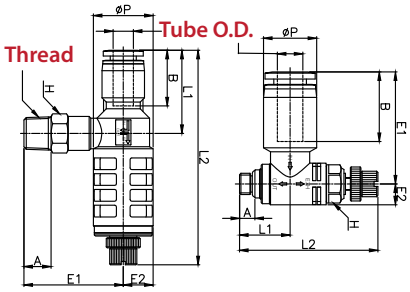

Metric Tube Sizes

Model	Tube OD	Thread	Package Qty.	Stock	Hex	Length	Weight
ESC04-M3	4mm	M3 x 0.5	1	No	8mm	1.20" (30.7mm)	0.40oz (11.4g)
ESC04-M5		M5 x 0.8				1.20" (30.7mm)	0.39oz (11.3g)
ESC06-S-01	6mm	1/8" Male BSPT (R)	1	No	10mm	2.87" (72.0mm)	0.75oz (21.5g)
ESC06-S-02		1/4" Male BSPT (R)			14mm	2.87" (72.0mm)	0.92oz (26.3g)
ESC06-M5		M5 x 0.8			8mm	1.23" (31.3mm)	0.43oz (12.3g)
ESC08-S-01	8mm	1/8" Male BSPT (R)	1	No	10mm	2.82" (71.7mm)	0.79oz (22.5g)
ESC08-M-01					14mm	3.24" (82.3mm)	1.41oz (40.0g)
ESC08-S-02		1/4" Male BSPT (R)			14mm	2.82" (71.7mm)	0.84oz (24.0g)
ESC08-M-02					14mm	3.24" (82.3mm)	1.51oz (42.9g)
ESC08-M-03		3/8" Male BSPT (R)			17mm	3.24" (82.3mm)	1.71oz (48.5g)
ESC10-M-01	10mm	1/8" Male BSPT (R)	1	No	14mm	3.31" (84.1mm)	1.47oz (41.7g)
ESC10-M-02		1/4" Male BSPT (R)				3.31" (84.1mm)	1.57oz (44.7g)
ESC10-L-02					19mm	3.48" (88.6mm)	1.77oz (72.5g)
ESC10-M-03		3/8" Male BSPT (R)			17mm	3.31" (84.1mm)	2.55oz (50.2g)
ESC10-L-03					19mm	3.48" (88.6mm)	2.69oz (76.5g)
ESC10-L-04		1/2" Male BSPT (R)			21mm	3.48" (88.6mm)	3.01oz (85.2g)
ESC12-L-02	12mm	1/4" Male BSPT (R)	1	No	19mm	3.60" (91.6mm)	2.65oz (75.2g)
ESC12-L-03		3/8" Male BSPT (R)				3.60" (91.6mm)	2.79oz (79.2g)
ESC12-L-04		1/2" Male BSPT (R			21mm	3.60" (91.6mm)	3.10oz (88.1g)

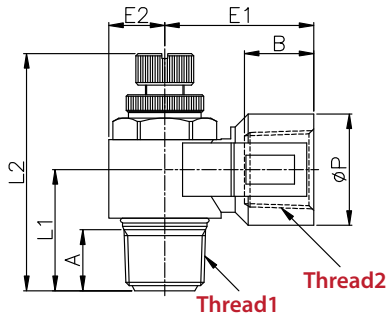

Metal Body Swivel Flow Control Elbow – NSCF

Metal Body Swivel Flow Control Elbows provide durable construction with two opposing threaded ports.

BSP Thread Sizes

Model	Thread 1	Thread 2	Package Qty.	Stock	Hex	Length	Weight
NSCF01	1/8" Male BSPT (R)	1/8" Female BSPT (R)	1	No	15mm	1.00" (25.5mm)	1.06oz (30.1g)
NSCF02	1/4" Male BSPT (R)	1/4" Female BSPT (R)	1	No	19mm	1.41" (36.0mm)	2.12oz (60.2g)
NSCF03	3/8" Male BSPT (R)	3/8" Female BSPT (R)	1	No	24mm	1.66" (42.4mm)	3.77oz (107g)
NSCF04	1/2" Male BSPT (R)	1/2" Female BSPT (R)	1	No	28mm	2.07" (52.7mm)	5.99oz (170g)

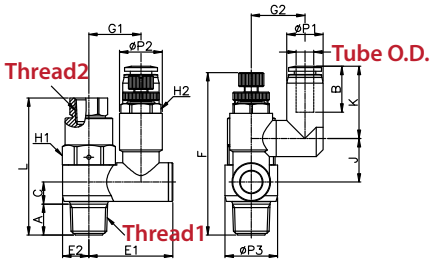

Swivel Flow Control with Pilot Check Valve – PVSC

These Swivel Flow Control fittings have a pilot controlled check valve, allowing a remote signal line to control its function. An offset push-to-control port is opposed to a male thread.

Metric Tube Sizes

Model	Tube OD	Thread 1	Thread 2	Package Qty.	Stock	Hex	Length	Weight
PVSC06-01	6mm	1/8" Male BSPT (R)	M5 x 0.8 Female	1	No	12mm	2.18" (55.4mm)	1.40oz (39.6g)
PVSC06-02		1/4" Male BSPT (R)	1/8" Female BSPT (R)			17mm	2.43" (61.9mm)	2.51oz (71.4g)
PVSC06-G01		1/8" Male BSPP (G)	M5 x 0.8			12mm	2.18" (55.4mm)	1.57oz (44.6g)
PVSC06-G02		1/4" Male BSPP (G)	1/8" Female BSPT (R)			17mm	2.43" (61.9mm)	2.80oz (79.4g)
PVSC08-01	8mm	1/8" Male BSPT (R)	M5 x 0.8	1	No	12mm	2.18" (55.4mm)	1.46oz (41.6g)
PVSC08-02		1/4" Male BSPT (R)	1/8" Female BSPT (R)			17mm	2.43" (61.9mm)	2.69oz (76.4g)
PVSC08-03		3/8" Male BSPT (R)	1/8" Female BSPT (R)			19mm	2.84" (72.2mm)	4.51oz (128g)
PVSC08-G01		1/8" Male BSPP (G)	M5 x 0.8			12mm	2.18" (55.4mm)	1.50oz (42.6g)
PVSC08-G02		1/4" Male BSPP (G)	1/8" Female BSPP (G)			17mm	2.43" (61.9mm)	2.83oz (80.4g)
PVSC08-G03		3/8" Male BSPP (G)	1/8" Female BSPP (G)			19mm	2.84" (72.2mm)	4.37oz (124g)
PVSC10-03	10mm	3/8" Male BSPT (R)	1/8" Female BSPT (R)	1	No	19mm	2.84" (72.2mm)	4.58oz (130g)
PVSC10-04		1/2" Male BSPT (R)	1/4" Female BSPT (R)			24mm	3.42" (87.0mm)	8.60oz (244g)
PVSC10-G03		3/8" Male BSPP (G)	1/8" Female BSPP (G)			19mm	2.84" (72.2mm)	4.83oz (137g)
PVSC10-G04		1/2" Male BSPP (G)	1/4" Female BSPP (G)			24mm	3.09" (78.5mm)	8.88oz (252g)
PVSC12-03	12mm	3/8" Male BSPT (R)	1/8" Female BSPT (R)	1	No	19mm	2.84" (72.2mm)	4.86oz (138g)
PVSC12-04		1/2" Male BSPT (R)	1/4" Female BSPT (R)			24mm	3.42" (87.0mm)	8.25oz (234g)
PVSC12-G03		3/8" Male BSPP (G)	1/8" Female BSPP (G)			19mm	2.84" (72.2mm)	5.11oz (145g)
PVSC12-G04		1/2" Male BSPP (G)	1/4" Female BSPP (G)			24mm	3.09" (78.5mm)	8.35oz (238g)

Resin-Series: Hand Valves

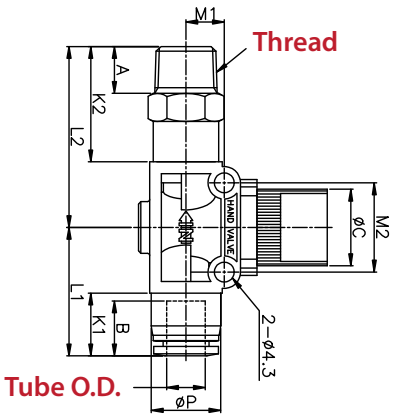

Straight “A” Hand Valve – HVC

Featuring a push-to-connect port opposed to a male thread, Straight Hand Valves allow users to stop the flow of air. “A” Models feature a push-to-connect port on the inlet.

Fractional Tube Sizes

Model	Tube OD	Thread	Package Qty.	Stock	Hex	Length	Weight
HVC1/4-N1	1/4”	1/8” Male NPT	1	No	9/16”	2.50” (63.6mm)	1.08oz (30.7g)
HVC1/4-N2		1/4” Male NPT				2.58” (65.6mm)	1.36oz (38.7g)
HVC1/4-N3		3/8” Male NPT			11/16”	2.62” (66.6mm)	1.61oz (45.7g)
HVC5/16-N1	5/16”	1/8” Male NPT	1	No	9/16”	2.54” (64.6mm)	1.22oz (34.7g)
HVC5/16-N2		1/4” Male NPT				2.62” (66.6mm)	1.36oz (38.7g)
HVC5/16-N3		3/8” Male NPT			11/16”	2.66” (67.6mm)	1.64oz (46.7g)
HVC3/8-N2	3/8”	1/4” Male NPT	1	No	11/16”	2.79” (70.9mm)	2.12oz (60.2g)
HVC3/8-N3		3/8” Male NPT				2.83” (71.9mm)	2.72oz (77.2g)
HVC3/8-N4		1/2” Male NPT			7/8”	2.94” (74.9mm)	2.61oz (74.2g)
HVC1/2-N2	1/2”	1/4” Male NPT	1	No	3/4”	2.98” (75.9mm)	2.43oz (69.0g)
HVC1/2-N3		3/8” Male NPT				3.02” (76.9mm)	2.96oz (84.0g)
HVC1/2-N4		1/2” Male NPT			7/8”	3.14” (79.9mm)	3.13oz (89.0g)

Metric Tube Sizes

Model	Tube OD	Thread	Package Qty.	Stock	Hex	Length	Weight
HVC-01-06	6mm	1/8” Male BSPT (R)	1	No	14mm	2.43” (61.8mm)	1.30oz (37.0g)
HVC-02-06		1/4” Male BSPT (R)				2.55” (64.8mm)	
HVC-03-06		3/8” Male BSPT (R)			17mm	2.59” (65.8mm)	1.65oz (47.0g)
HVC-G01-06		1/8” Male BSPP (G)			14mm	2.31” (58.8mm)	1.30oz (37.0g)
HVC-G02-06		1/4” Male BSPP (G)			17mm	2.39” (60.8mm)	
HVC-G03-06		3/8” Male BSPP (G)			20mm	2.37” (60.3mm)	1.65oz (47.0g)
HVC-01-08	8mm	1/8” Male BSPT (R)	1	No	14mm	2.48” (63.0mm)	1.23oz (35.0g)
HVC-02-08		1/4” Male BSPT (R)				2.59” (66.0mm)	1.44oz (41.0g)
HVC-03-08		3/8” Male BSPT (R)			17mm	2.63” (67.0mm)	1.69oz (48.0g)
HVC-G01-08		1/8” Male BSPP (G)			14mm	2.36” (60.0mm)	1.23oz (35.0g)
HVC-G02-08		1/4” Male BSPP (G)			17mm	2.44” (62.0mm)	1.44oz (41.0g)
HVC-G03-08		3/8” Male BSPP (G)			20mm	2.42” (61.5mm)	1.69oz (48.0g)
HVC-02-10	10mm	1/4” Male BSPT (R)	1	No	17mm	2.77” (70.5mm)	2.04oz (58.0g)
HVC-03-10		3/8” Male BSPT (R)				2.81” (71.5mm)	2.15oz (61.0g)
HVC-04-10		1/2” Male BSPT (R)			21mm	2.93” (74.5mm)	2.89oz (82.0g)
HVC-G02-10		1/2” Male BSPT (R)			17mm	2.61” (66.5mm)	2.04oz (58.0g)
HVC-G03-10		3/8” Male BSPP (G)			20mm	2.59” (66.0mm)	2.15oz (61.0g)
HVC-G04-10		1/2” Male BSPP (G)			24mm	2.65” (67.5mm)	2.89oz (82.0g)
HVC-02-12	12mm	1/4” Male BSPT (R)	1	No	19mm	2.83” (72.1mm)	2.43oz (69.0g)
HVC-03-12		3/8” Male BSPT (R)				2.87” (73.1mm)	2.39oz (68.0g)
HVC-04-12		1/2” Male BSPT (R)			21mm	2.99” (76.1mm)	2.68oz (76.0g)
HVC-G02-12		1/2” Male BSPT (R)			19mm	2.80” (71.2mm)	2.43oz (69.0g)
HVC-G03-12		3/8” Male BSPP (G)			20mm	2.78” (70.7mm)	2.39oz (68.0g)
HVC-G04-12		1/2” Male BSPP (G)			24mm	2.84” (72.2mm)	2.68oz (76.0g)

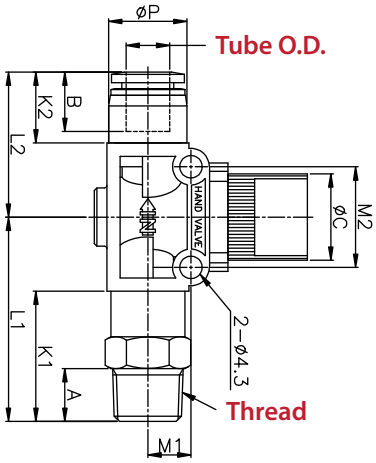

Straight "B" Hand Valve – HVF

Featuring a push-to-connect port opposed to a male thread, Straight Hand Valves allow users to stop the flow of air. "B" Models feature threaded port on the inlet.

Fractional Tube Sizes

Model	Tube OD	Thread	Package Qty.	Stock	Hex	Length	Weight
HVF-N1-1/4	1/4"	1/8" Male NPT	1	No	9/16"	2.50" (63.6mm)	1.08oz (30.7g)
HVF-N2-1/4		1/4" Male NPT				2.58" (65.6mm)	1.36oz (38.7g)
HVF-N3-1/4		3/8" Male NPT			11/16"	2.62" (66.6mm)	1.61oz (45.7g)
HVF-N1-5/16	5/16"	1/8" Male NPT	1	No	9/16"	2.54" (64.6mm)	1.22oz (34.7g)
HVF-N2-5/16		1/4" Male NPT				2.62" (66.6mm)	1.36oz (38.7g)
HVF-N3-5/16		3/8" Male NPT			11/16"	2.66" (67.6mm)	1.64oz (46.7g)
HVF-N2-3/8	3/8"	1/4" Male NPT	1	No	11/16"	2.79" (70.9mm)	1.92oz (54.2g)
HVF-N3-3/8		3/8" Male NPT				2.83" (71.9mm)	2.12oz (60.2g)
HVF-N4-3/8		1/2" Male NPT			7/8"	2.94" (74.9mm)	2.73oz (77.2g)
HVF-N2-1/2	1/2"	1/4" Male NPT	1	No	3/4"	2.98" (75.9mm)	2.43oz (69.0g)
HVF-N3-1/2		3/8" Male NPT				3.02" (76.9mm)	2.61oz (74.0g)
HVF-N4-1/2		1/2" Male NPT			7/8"	3.14" (79.9mm)	2.96oz (84.0g)

Metric Tube Sizes

Model	Tube OD	Thread	Package Qty.	Stock	Hex	Length	Weight
HVF-01-06	6mm	1/8" Male BSPT (R)	1	No	14mm	2.43" (61.8mm)	1.30oz (37.0g)
HVF-02-06		1/4" Male BSPT (R)				2.55" (64.8mm)	
HVF-03-06		3/8" Male BSPT (R)			17mm	2.59" (65.8mm)	1.65oz (47.0g)
HVF-G01-06		1/8" Male BSPP (G)			14mm	2.31" (58.8mm)	1.30oz (37.0g)
HVF-G02-06		1/4" Male BSPP (G)			17mm	2.39" (60.8mm)	
HVF-G03-06		3/8" Male BSPP (G)			20mm	2.37" (60.3mm)	1.65oz (47.0g)
HVF-01-08	8mm	1/8" Male BSPT (R)	1	No	14mm	2.48" (63.0mm)	1.23oz (35.0g)
HVF-02-08		1/4" Male BSPT (R)				2.59" (66.0mm)	1.44oz (41.0g)
HVF-03-08		3/8" Male BSPT (R)			17mm	2.63" (67.0mm)	1.69oz (48.0g)
HVF-G01-08		1/8" Male BSPP (G)			14mm	2.36" (60.0mm)	1.23oz (35.0g)
HVF-G02-08		1/4" Male BSPP (G)			17mm	2.44" (62.0mm)	1.44oz (41.0g)
HVF-G03-08		3/8" Male BSPP (G)			20mm	2.42" (61.5mm)	1.69oz (48.0g)
HVF-02-10	10mm	1/4" Male BSPT (R)	1	No	17mm	2.77" (70.5mm)	2.04oz (58.0g)
HVF-03-10		3/8" Male BSPT (R)				2.81" (71.5mm)	2.15oz (61.0g)
HVF-04-10		1/2" Male BSPT (R)			21mm	2.93" (74.5mm)	2.89oz (82.0g)
HVF-G02-10		1/2" Male BSPT (R)			17mm	2.61" (66.5mm)	2.04oz (58.0g)
HVF-G03-10		3/8" Male BSPP (G)			20mm	2.59" (66.0mm)	2.15oz (61.0g)
HVF-G04-10		1/2" Male BSPP (G)			24mm	2.65" (67.5mm)	2.89oz (82.0g)
HVF-02-12	12mm	1/4" Male BSPT (R)	1	No	19mm	2.83" (72.1mm)	2.43oz (69.0g)
HVF-03-12		3/8" Male BSPT (R)				2.87" (73.1mm)	2.39oz (68.0g)
HVF-04-12		1/2" Male BSPT (R)			21mm	2.99" (76.1mm)	2.68oz (76.0g)
HVF-G02-12		1/2" Male BSPT (R)			19mm	2.80" (71.2mm)	2.43oz (69.0g)
HVF-G03-12		3/8" Male BSPP (G)			20mm	2.78" (70.7mm)	2.39oz (68.0g)
HVF-G04-12		1/2" Male BSPP (G)			24mm	2.84" (72.2mm)	2.68oz (76.0g)

Technifit™ Push-to-Connect Fittings

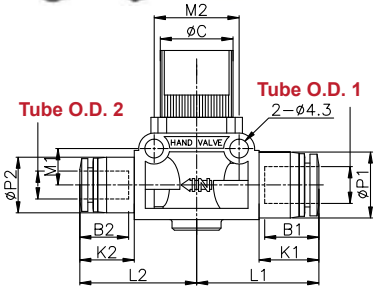

Union Straight Hand Valve – HVU

Union Straight Hand Valves feature opposing push-to-connect ports, allowing users to stop the flow of air.

Fractional Tube Sizes

Model	Tube 1 OD	Tube 2 OD	Package Qty.	Stock	Length	Weight
HVU1/4-1/4	1/4"	1/4"	1	Yes	2.08" (53.0mm)	0.79oz (22.4g)
HVU5/16-1/4	5/16"	1/4"	1	No	2.12" (54.0mm)	0.82oz (23.4g)
HVU5/16-5/16		5/16'		Yes	2.16" (55.0mm)	0.86oz (24.4g)
HVU3/8-5/16	3/8"	5/16"	1	No	2.29" (58.4mm)	1.33oz (37.9g)
HVU3/8-3/8		3/8"		Yes	2.43" (61.8mm)	1.42oz (40.4g)
HVU1/2-3/8	1/2"	3/8"	1	No	2.56" (65.2mm)	1.45oz (41.2g)
HVU1/2-1/2		1/2"		Yes	2.70" (68.6mm)	1.65oz (47.0g)

Metric Tube Sizes

Model	Tube 1 OD	Tube 2 OD	Package Qty.	Stock	Length	Weight
HVU06-06	6mm	6mm	1	Yes	2.06" (52.4mm)	0.95oz (27.0g)
HVU08-06	8mm	6mm	1	No	2.11" (53.6mm)	0.95oz (27.0g)
HVU08-08		8mm		Yes	2.15" (54.8mm)	0.98oz (28.0g)
HVU10-08	10mm	8mm	1	No	2.29" (58.4mm)	1.44oz (41.0g)
HVU10-10		10mm		Yes	2.44" (62.0mm)	1.48oz (42.0g)
HVU12-10	12mm	10mm	1	No	2.56" (65.1mm)	1.58oz (45.0g)
HVU12-12		12mm		Yes	2.69" (68.5mm)	1.65oz (47.0g)

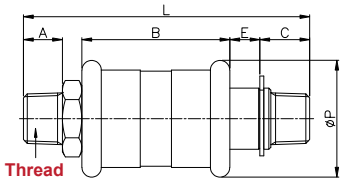

Nipple Slide Hand Valve – HSV

Nipple Slide Hand Valves provide a compact package, allowing users to stop the flow of air by moving the collar.

BSP Thread Sizes

Model	Thread	Package Qty.	Stock	Hex	Length	Weight
HSV-M5	M5 x 0.8	1	No	9mm	1.77" (45.0mm)	0.84oz (24.0g)
HSV-01	1/8" Male BSPT	1	No	14mm	2.12" (54.0mm)	1.58oz (45.0g)
HSV-02	1/4" Male BSPT	1	No	17mm	2.89" (73.5mm)	3.95oz (112g)
HSV-03	3/8" Male BSPT	1	No	27mm	3.26" (83.0mm)	9.73oz (276g)
HSV-04	1/2" Male BSPT	1	No	27mm	3.50" (89.0mm)	9.52oz (270g)
HSV-06	3/4" Male BSPT	1	No	32mm	4.09" (104mm)	14.35oz (407g)

Nipple Hand Valve – HVM

Featuring two opposing threads, Nipple Hand Valves provide a method of shutting off airflow.

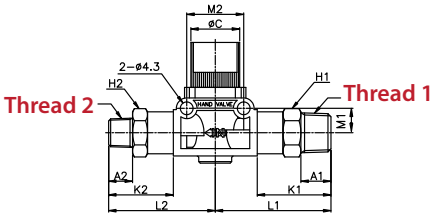

NPT Thread Sizes

Model	Thread 1	Thread 2	Package Qty.	Stock	Hex	Length	Weight
HVM-N1-N1	1/8" Male NPT	1/8" Male NPT	1	No	9/16"	2.92" (74.2mm)	1.41oz (40.0g)
HVM-N2-N1	1/4" Male NPT	1/8" Male NPT	1	No	9/16"	3.03" (77.1mm)	1.65oz (47.0g)
HVM-N2-N2		1/4" Male NPT				3.11" (79.1mm)	1.90oz (54.0g)
HVM-N3-N2	3/8" Male NPT	1/4" Male NPT	1	No	11/16"	3.15" (80.1mm)	3.10oz (88.0g)
HVM-N3-N3		3/8" Male NPT				3.22" (82.0mm)	3.24oz (92.0g)
HVM-N4-N3	1/2" Male NPT	3/8" Male NPT	1	No	7/8"	3.40" (86.6mm)	3.73oz (106g)
HVM-N4-N4		1/2" Male NPT				3.59" (91.2mm)	4.19oz (119g)

BSP Thread Sizes

Model	Thread 1	Thread 2	Package Qty.	Stock	Hex	Length	Weight
HVM-01-01	1/8" Male BSPT (R)	1/8" Male BSPT (R)	1	No	14mm	2.80" (71.2mm)	1.65oz (47.0g)
HVM-02-01	1/4" Male BSPT (R)	1/8" Male BSPT (R)	1	No	14mm	2.92" (74.2mm)	1.72oz (49.0g)
HVM-02-02		1/4" Male BSPT (R)				3.03" (77.2mm)	1.76oz (50.0g)
HVM-03-02	3/8" Male BSPT (R)	1/4" Male BSPT (R)	1	No	17mm	3.11" (79.1mm)	2.25oz (64.0g)
HVM-03-03		3/8" Male BSPT (R)				3.18" (81.0mm)	2.92oz (83.0g)
HVM-04-03	1/2" Male BSPT (R)	3/8" Male BSPT (R)	1	No	21mm	3.37" (85.6mm)	3.63oz (103g)
HVM-04-04		1/2" Male BSPT (R)				3.55" (90.2mm)	4.26oz (121g)
HVM-G01-G01	1/8" Male BSPP (G)	1/8" Male BSPP (G)	1	No	14mm	2.56" (65.2mm)	1.65oz (47.0g)
HVM-G02-G01	1/4" Male BSPP (G)	1/8" Male BSPP (G)	1	No	14mm	2.64" (67.2mm)	1.72oz (49.0g)
HVM-G02-G02		1/4" Male BSPP (G)			17mm	2.72" (69.2mm)	1.76oz (50.0g)
HVM-G03-G02	3/8" Male BSPP (G)	1/4" Male BSPP (G)	1	No	17mm	2.74" (69.6mm)	2.25oz (64.0g)
HVM-G03-G03		3/8" Male BSPP (G)			20mm	2.75" (70.0mm)	2.92oz (83.0g)
HVM-G04-G03	1/2" Male BSPP (G)	3/8" Male BSPP (G)	1	No	20mm	2.87" (73.1mm)	3.63oz (103g)
HVM-G04-G04		1/2" Male BSPP (G)			24mm	3.00" (76.2mm)	4.26oz (121g)

Resin-Series: Stop Fittings

Swivel Stop Fitting Straight – SPC

Swivel Stop Straight Fittings block the flow of air once tubing is removed from the push-to-connect port. Straight Fittings contain a push-to-connect port opposed to a male thread.

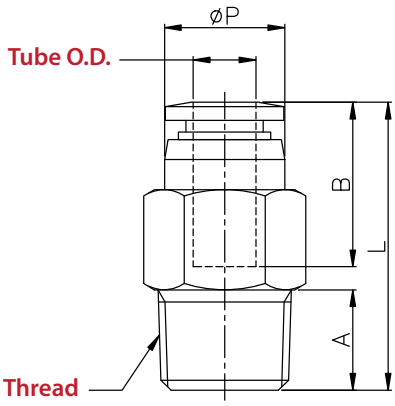

Fractional Tube Sizes

Model	Tube OD	Thread	Package Qty.	Stock	Hex	Length	Weight
SPC5/32-N1	5/32"	1/8" Male NPT	10	No	7/16"	1.02" (26.1mm)	0.41oz (11.8g)
SPC3/16-N1	3/16"	1/8" Male NPT	10	No	7/16"	1.07" (27.3mm)	0.48oz (13.8g)
SPC3/16-N2		1/4" Male NPT			9/16"		0.76oz (21.8g)
SPC1/4-N1	1/4"	1/8" Male NPT	10	Yes	1/2"	1.17" (29.8mm)	0.52oz (14.8g)
SPC1/4-N2		1/4" Male NPT			9/16"		0.80oz (22.8g)
SPC5/16-N1	5/16"	1/8" Male NPT	10	No	9/16"	1.31" (33.4mm)	0.65oz (18.7g)
SPC5/16-N2		1/4" Male NPT					0.62oz (17.7g)
SPC5/16-N3		3/8" Male NPT			11/16"	1.31" (33.4mm)	1.32oz (37.7g)
SPC3/8-N2	3/8"	1/4" Male NPT	10	Yes	11/16"	1.43" (36.4mm)	1.03oz (29.4g)
SPC3/8-N3		3/8" Male NPT		No		1.48" (37.6mm)	1.28oz (36.4g)
SPC3/8-N4		1/2" Male NPT			7/8"	1.51" (38.4mm)	2.09oz (59.4g)
SPC1/2-N3	1/2"	3/8" Male NPT	10	No	7/8"	1.77" (45.0mm)	2.19oz (62.1g)
SPC1/2-N4		1/2" Male NPT					2.47oz (70.1g)

Metric Tube Sizes

Model	Tube OD	Thread	Package Qty.	Stock	Hex	Length	Weight
SPC04-01	4mm	1/8" Male BSPT (R)	10	No	10mm	1.02" (26.1mm)	0.35oz (10.0g)
SPC04-G01		1/8" Male BSPP (G)			12mm	1.00" (25.5mm)	0.35oz (10.0g)
SPC06-01	6mm	1/8" Male BSPT (R)	10	No	12mm	1.12" (28.7mm)	0.45oz (13.0g)
SPC06-02		1/4" Male BSPT (R)	5	Yes	14mm		0.70oz (20.0g)
SPC06-G01		1/8" Male BSPP (G)	10	No	12mm	1.09" (27.2mm)	0.45oz (13.0g)
SPC06-G02		1/4" Male BSPP (G)	5		15mm		0.70oz (20.0g)
SPC08-02	8mm	1/4" Male BSPT (R)	5	No	14mm	1.31" (33.3mm)	0.70oz (20.0g)
SPC08-03		3/8" Male BSPT (R)			17mm		1.26oz (36.0g)
SPC08-G02		1/4" Male BSPP (G)			15mm	1.25" (31.9mm)	0.70oz (20.0g)
SPC08-G03		3/8" Male BSPP (G)			17mm		1.26oz (36.0g)
SPC10-02	10mm	1/4" Male BSPT (R)	5	No	17mm	1.43" (36.4mm)	1.69oz (48.0g)
SPC10-03		3/8" Male BSPT (R)				1.48" (37.6mm)	1.26oz (36.0g)
SPC10-04		1/2" Male BSPT (R)			21mm	1.51" (38.4mm)	2.11oz (60.0g)
SPC10-G02		1/4" Male BSPP (G)			17mm	1.37" (34.9mm)	1.69oz (48.0g)
SPC10-G03		3/8" Male BSPP (G)				1.43" (36.4mm)	1.27oz (36.0g)
SPC10-G04		1/2" Male BSPP (G)			21mm	1.47" (37.4mm)	2.12oz (60.0g)
SPC12-02	12mm	1/4" Male BSPT (R)	5	No	19mm	1.75" (44.6mm)	1.69oz (48.0g)
SPC12-03		3/8" Male BSPT (R)					1.72oz (49.0g)
SPC12-04		1/2" Male BSPT (R)			21mm		2.25oz (64.0g)
SPC12-G02		1/4" Male BSPP (G)			19mm	1.70" (43.2mm)	1.69oz (48.0g)
SPC12-G03		3/8" Male BSPP (G)			21mm		1.72oz (49.0g)
SPC12-G04		1/2" Male BSPP (G)				1.72" (43.7mm)	2.25oz (64.0g)

Technifit™ Push-to-Connect Fittings

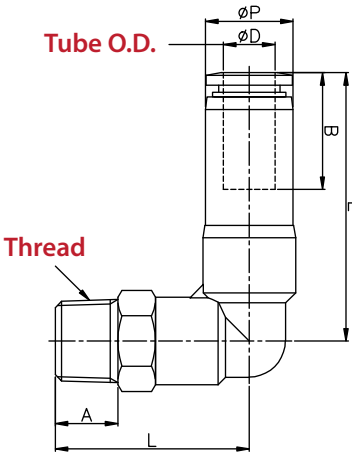

Swivel Stop Fitting Elbow – SPL

Swivel Stop Elbow Fittings block the flow of air once tubing is removed from the push-to-connect port. Elbow Fittings contain a push-to-connect port opposed to a male thread.

Fractional Tube Sizes

Model	Tube OD	Thread	Package Qty.	Stock	Hex	Length	Weight
SPL5/32-U	5/32"	10-32 Male	10	No	7/16"	1.61" (29.5mm)	0.56oz (15.8g)
SPL5/32-N1		1/8" Male NPT	5				0.70oz (19.8g)
SPL3/16-U	3/16"	10-32 Male	10	No	7/16"	1.20" (30.5mm)	0.70oz (19.8g)
SPL3/16-N1		1/8" Male NPT	5				0.73oz (20.8g)
SPL3/16-N2		1/4" Male NPT			9/16"		1.09oz (30.8g)
SPL1/4-U	1/4"	10-32 Male	10	No	1/2"	1.31" (33.3mm)	0.80oz (22.8g)
SPL1/4-N1		1/8" Male NPT	5				0.88oz (24.8g)
SPL1/4-N2		1/4" Male NPT			9/16"		1.12oz (31.8g)
SPL5/16-N1	5/16"	1/8" Male NPT	5	No	9/16"	1.69" (43.0mm)	1.05oz (29.7g)
SPL5/16-N2		1/4" Male NPT					1.30oz (36.7g)
SPL5/16-N3		3/8" Male NPT			11/16"		1.68oz (47.7g)
SPL3/8-N2	3/8"	1/4" Male NPT	5	No	11/16"	1.92" (48.9mm)	1.99oz (56.4g)
SPL3/8-N3		3/8" Male NPT					2.34oz (66.4g)
SPL3/8-N4		1/2" Male NPT			7/8"		2.70oz (76.4g)
SPL1/2-N3	1/2"	3/8" Male NPT	5	No	3/4"	2.22" (56.3mm)	2.90oz (82.1g)
SPL1/2-N4		1/2" Male NPT			7/8"		3.64oz (103g)

Metric Tube Sizes

Model	Tube OD	Thread	Package Qty.	Stock	Hex	Length	Weight
	4mm	M5 x 0.8	10	No	10mm	1.77" (29.5mm)	0.45oz (13.0g)
		M6 x 1.0					0.49oz (14.0g)
		1/8" Male BSPT (R)	5				0.52oz (15.0g)
		1/8" Male BSPP (G)			14mm		
	6mm	M5 x 0.8	10	No	12mm	1.29" (32.8mm)	0.67oz (19.0g)
		1/8" Male BSPT (R)	5				0.77oz (22.0g)
		1/4" Male BSPT (R)			14mm		0.95oz (27.0g)
		1/8" Male BSPP (G)					0.77oz (27.0g)
		1/4" Male BSPP (G)			17mm		
	8mm	1/8" Male BSPT (R)	5	No	14mm	1.68" (42.9mm)	1.12oz (32.0g)
		1/4" Male BSPT (R)					1.34oz (38.0g)
		3/8" Male BSPT (R)			17mm		1.55oz (44.0g)
		1/4" Male BSPP (G)					1.34oz (38.0g)
		3/8" Male BSPP (G)			20mm		1.55oz (44.0g)
	10mm	1/4" Male BSPT (R)	5	No	17mm	1.92" (49.0mm)	2.01oz (57.0g)
		3/8" Male BSPT (R)			17mm		2.25oz (64.0g)
		1/2" Male BSPT (R)			21mm		2.82oz (80.0g)
		1/4" Male BSPP (G)			17mm		2.01oz (57.0g)
		3/8" Male BSPP (G)			20mm		2.25oz (64.0g)
		1/2" Male BSPP (G)			24mm		2.82oz (80.0g)
	12mm	3/8" Male BSPT (R)	5	No	19mm	2.26" (57.5mm)	2.75oz (78.0g)
		1/2" Male BSPT (R)			21mm		3.20oz (91.0g)
		3/8" Male BSPP (G)			20mm		2.75oz (78.0g)
		1/2" Male BSPP (G)			24mm		3.20oz (91.0g)

Technifit™ Push-to-Connect Fittings

Stop Fitting Straight Union – SPU

Swivel Stop Straight Union Fittings block the flow of air once tubing is removed from the push-to-connect port. Union Fittings contain two opposing push-to-connect ports.

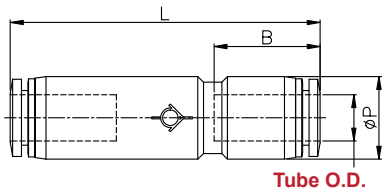

Fractional Tube Sizes

Model	Tube 1 OD	Tube 2 OD	Package Qty.	Stock	Length	Weight
SPU5/32	5/32"	5/32"	5	Yes	1.64" (41.8mm)	0.23oz (6.60g)
SPU3/16	3/16"	3/16"	5	No	1.70" (43.4mm)	0.26oz (7.40g)
SPU1/4	1/4"	1/4"	5	Yes	1.84" (46.9mm)	0.29oz (8.40g)
SPU5/16	5/16"	5/16"	5	Yes	2.08" (52.9mm)	0.43oz (12.4g)
SPU3/8	3/8"	3/8"	5	Yes	2.29" (58.4mm)	0.75oz (21.4g)
SPU1/2	1/2"	1/2"	5	Yes	2.66" (67.7mm)	1.26oz (36.0g)

Metric Tube Sizes

Model	Tube 1 OD	Tube 2 OD	Package Qty.	Stock	Length	Weight
SPU04	4mm	4mm	5	No	1.64" (41.7mm)	0.17oz (5.00g)
SPU06	6mm	6mm	5	Yes	1.80" (45.9mm)	0.28oz (8.00g)
SPU08	8mm	8mm	5	No	2.07" (52.8mm)	0.38oz (11.0g)
SPU10	10mm	10mm	5	Yes	2.29" (58.3mm)	0.67oz (19.0g)
SPU12	12mm	12mm	5	Yes	2.64" (67.1mm)	1.05oz (30.0g)

Resin-Series: Check Valve Fittings

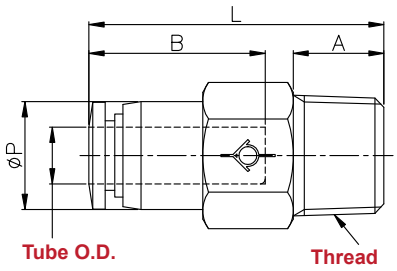

Check Valve Straight – CVPC

Check Valve Straight Fittings limit the flow of air to one direction. Straight Fittings contain a push-to-connect port opposed to a male thread.

Fractional Tube Sizes

Model	Tube OD	Thread	Package Qty.	Stock	Hex	Length	Weight
CVPC5/32-U	5/32"	10-32 Male	10	No	3/8"	1.23" (31.4mm)	0.41oz (11.8g)
CVPC5/32-N1		1/8" Male NPT			7/16"	1.07" (27.3mm)	0.38oz (10.8g)
CVPC3/16-U	3/16"	10-32 Male	10	No	7/16"	1.28" (32.6mm)	0.41oz (11.8g)
CVPC3/16-N1		1/8" Male NPT				1.12" (28.5mm)	0.48oz (13.8g)
CVPC3/16-N2		1/4" Male NPT			9/16"		0.69oz (19.8g)
CVPC1/4-N1	1/4"	1/8" Male NPT	10	Yes	1/2"	1.30" (33.1mm)	0.62oz (17.8g)
CVPC1/4-N2		1/4" Male NPT	5		9/16"		0.76oz (21.8g)
CVPC5/16-N1	5/16"	1/8" Male NPT	5	No	9/16"	1.37" (35.0mm)	0.73oz (20.7g)
CVPC5/16-N2		1/4" Male NPT				1.46" (37.3mm)	0.80oz (22.7g)
CVPC3/8-N3	3/8"	3/8" Male NPT	5	No	7/8"	2.21" (56.3mm)	1.60oz (45.4g)
CVPC3/8-N4		1/2" Male NPT				2.29" (58.3mm)	2.23oz (63.4g)
CVPC1/2-N3	1/2"	3/8" Male NPT	5	No	15/16"	2.42" (61.5mm)	1.69oz (48.1g)
CVPC1/2-N4		1/2" Male NPT				2.57" (65.5mm)	2.40oz (68.1g)

Metric Tube Sizes

Model	Tube OD	Thread	Package Qty.	Stock	Hex	Length	Weight
CVPC04-01	4mm	1/8" Male BSPT (R)	10	No	10mm	1.07" (27.3mm)	0.38oz (11.0g)
CVPC04-G01		1/4" Male BSPT (R)					
CVPC04-M5		M5 x 0.8				1.23" (31.4mm)	
CVPC04-M6		M6 x 1.0				1.19" (30.4mm)	
CVPC06-01	6mm	1/8" Male BSPT (R)	10	Yes	12mm	1.27" (32.5mm)	0.56oz (16.0g)
CVPC06-02		1/4" Male BSPT (R)	5		14mm		0.84oz (24.0g)
CVPC06-G01		1/8" Male BSPP (G)	10		14mm	1.37" (34.8mm)	0.56oz (16.0g)
CVPC06-G02		1/4" Male BSPP (G)	5		15mm	1.45" (36.9mm)	0.84oz (24.0g)
CVPC08-01	8mm	1/8" Male BSPT (R)	5	No	14mm	1.37" (34.9mm)	0.74oz (21.0g)
CVPC08-02		1/4" Male BSPT (R)				1.46" (37.2mm)	0.84oz (24.0g)
CVPC08-G01		1/8" Male BSPP (G)				1.37" (34.8mm)	0.74oz (21.0g)
CVPC08-G02		1/4" Male BSPP (G)			15mm	1.45" (36.9mm)	0.84oz (24.0g)
CVPC10-03	10mm	3/8" Male BSPT (R)	4	No	22mm	2.21" (56.3mm)	1.23oz (35.0g)
CVPC10-04		1/2" Male BSPT (R)				2.29" (58.3mm)	1.44oz (41.0g)
CVPC10-G03		3/8" Male BSPP (G)				2.12" (54.0mm)	1.23oz (35.0g)
CVPC10-G04		1/2" Male BSPP (G)			24mm	2.17" (55.3mm)	1.44oz (41.0g)
CVPC12-03	12mm	3/8" Male BSPT (R)	4	No	24mm	2.44" (62.2mm)	1.41oz (40.0g)
CVPC12-04		1/2" Male BSPT (R)				2.56" (65.2mm)	
CVPC12-G03		3/8" Male BSPP (G)				2.31" (58.9mm)	
CVPC12-G04		1/2" Male BSPP (G)				2.37" (60.2mm)	

Technifit™ Push-to-Connect Fittings

Check Valve Bushing – CVPF

Check Valve Bushings limit the flow of air to one direction. Check Valve Bushings contain a push-to-connect port opposed to a female thread.

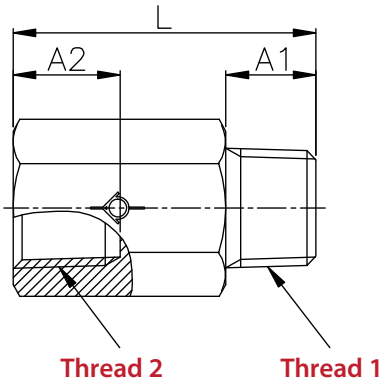

Fractional Tube Sizes

Model	Thread 1	Thread 2	Package Qty.	Stock	Hex	Length	Weight
CVPF-N1-N1	1/8" Male NPT	1/8" Female NPT	10	No	1/2"	1.10" (28.1mm)	0.67oz (19.0g)
CVPF-N2-N2	1/4" Male NPT	1/4" Female NPT	5	No	11/16"	1.34" (34.1mm)	1.41oz (40.0g)
CVPF-N3-N3	3/8" Male NPT	3/8" Female NPT	5	No	7/8"	2.11" (53.8mm)	3.88oz (110g)
CVPF-N4-N4	1/2" Male NPT	1/2" Female NPT	5	No	15/16"	2.40" (61.0mm)	4.76oz (135g)

Metric Tube Sizes

Model	Thread 1	Thread 2	Package Qty.	Stock	Hex	Length	Weight
CVPF-01-01	1/8" Male BSPT (R)	1/8" Female BSPT (R)	10	No	12mm	108" (27.6mm)	0.56oz (16.0g)
CVPF-02-02	1/4" Male BSPT (R)	1/4" Female BSPT (R)	5	No	17mm	1.32" (33.6mm)	1.34oz (38.0g)
CVPF-03-03	3/8" Male BSPT (R)	3/8" Female BSPT (R)	5	No	22mm	2.09" (53.3mm)	3.77oz (107g)
CVPF-04-04	1/2" Male BSPT (R)	1/2" Female BSPT (R)	5	No	24mm	2.43" (61.5mm)	4.62oz (131g)
CVPF-G01-G01	1/8" Male BSPP (G)	1/8" Female BSPP (G)	10	No	14mm	0.90" (23.0mm)	0.81oz (23.0g)
CVPF-G02-G02	1/4" Male BSPP (G)	1/4" Female BSPP (G)	5	No	17mm	1.53" (39.0mm)	1.37oz (39.0g)
CVPF-G03-G03	3/8" Male BSPP (G)	3/8" Female BSPP (G)	5	No	22mm	4.01" (102mm)	3.59oz (102g)
CVPF-G04-G04	1/2" Male BSPP (G)	1/2" Female BSPP (G)	5	No	24mm	4.76" (121mm)	4.26oz (121g)

Check Valve Straight Union – CVPU

Check Valve Straight Unions limit the flow of air to one direction. These fittings contain two opposing push-to-connect ports.

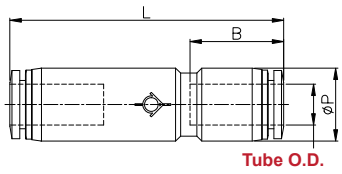

Fractional Tube Sizes

Model	Tube 1 OD	Tube 2 OD	Package Qty.	Stock	Length	Weight
CVPU5/32	5/32"	5/32"	10	Yes	1.66" (42.3mm)	0.17oz (4.90g)
CVPU3/16	3/16"	3/16"	10	Yes	1.73" (44.1mm)	0.26oz (7.40g)
CVPU1/4	1/4"	1/4"	5	Yes	1.90" (48.4mm)	0.28oz (8.20g)
CVPU5/16	5/16"	5/16"	5	Yes	2.18" (55.6mm)	0.45oz (12.9g)
CVPU3/8	3/8"	3/8"	5	Yes	N/A	N/A
CVPU1/2	1/2"	1/2"	5	Yes	N/A	N/A

Metric Tube Sizes

Model	Tube 1 OD	Tube 2 OD	Package Qty.	Stock	Length	Weight
CVPU04	4mm	4mm	10	Yes	1.64" (41.9mm)	0.17oz (4.90g)
CVPU06	6mm	6mm	10	Yes	1.86" (47.4mm)	0.28oz (8.20g)
CVPU08	8mm	8mm	5	Yes	2.18" (55.5mm)	0.45oz (12.9g)
CVPU10	10mm	10mm	5	Yes	N/A	N/A
CVPU12	12mm	12mm	5	Yes	N/A	N/A

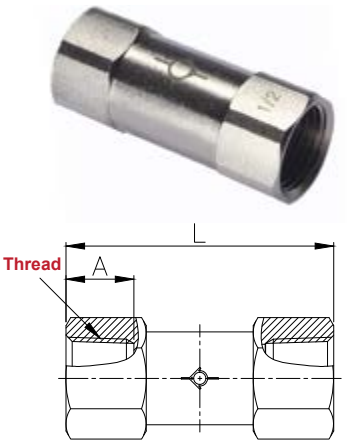

Check Valve Female – CVFF

Check Valve Female Fittings limit the flow of air to one direction. These fittings contain two opposing female threads.

BSP Thread Sizes

Model	Thread 1	Thread 2	Package Qty.	Stock	Hex	Length	Weight
CVFF01-01	1/8" Female BSPT (R)	1/8" Female BSPT (R)	10	No	12mm	1.40" (35.6mm)	0.70oz (20.0g)
CVFF02-02	1/4" Female BSPT (R)	1/4" Female BSPT (R)	5	No	17mm	1.70" (43.3mm)	1.73oz (49.2g)
CVFF03-03	3/8" Female BSPT (R)	3/8" Female BSPT (R)	5	No	22mm	2.09" (53.2mm)	3.31oz (93.9g)
CVFF04-04	1/2" Female BSPT (R)	1/2" Female BSPT (R)	5	No	24mm	2.38" (60.5mm)	3.98oz (113g)

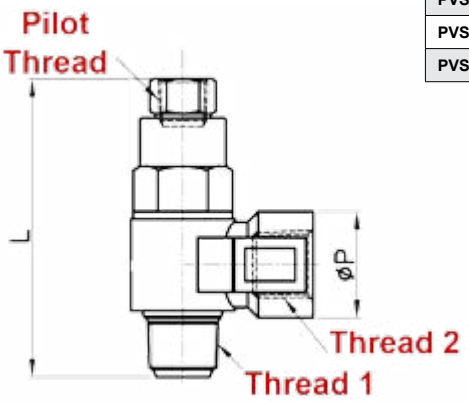

Pilot Check Valve Elbow – PVSF

Pilot Check Valve Elbows enable a user to supply pilot pressure to the fitting, enabling a one-way flow of compressed air or gases.

Metric Tube Sizes

Model	Thread 1	Thread 2	Pilot Thread	Package Qty.	Stock	Hex	Length	Weight
PVSF01	1/8" Male BSPT (R)	1/8" Female BSPT (R)	M5 x 0.8 Female	N/A	No	12mm	1.76" (40.8mm)	1.21oz (34.50g)
PVSF02	1/4" Male BSPT (R)	1/4" Female BSPT (R)	1/8" Male BSPT (R)	N/A	No	17mm	1.92" (48.9mm)	2.63oz (74.60g)
PVSF03	3/8" Male BSPT (R)	3/8" Female BSPT (R)	1/8" Male BSPT (R)	N/A	No	20mm	2.23" (56.7mm)	4.35oz (123.4g)
PVSF04	1/2" Male BSPT (R)	1/2" Female BSPT (R)	1/4" Male BSPT (R)	N/A	No	24mm	2.77" (70.6mm)	7.30oz (207.2g)

Nickel-Plated Brass Series

The Nickel-Plated Brass Series of push-to-connect fittings feature complete brass construction, along with an attractive finish.

B 06 - 01 M - PT

Nickel-Plated Brass	Tubing Size	Thread Size		Model	Thread Type	
		U	10-32 Male		(Blank)	NPT
		01	1/8”		PT	BSPT (R)
		02	1/4"		PP	BSPP (G)
		03	3/8”			
		04	1/2"			
		M5	M5 x 0.8			
		M6	M6 x 1.0			

Specifications	
Working Pressure	217 psi
Temperature Range	4°F to 160°F
Vacuum Rating	28 “ HG
Metal Body Material	Nickel-Plated Brass
O-Ring	NBR (Buna-N)
Grip Ring	Stainless Steel
Release Ring	Nickel-Plated Brass
Media	Compressed Air/ Inert Gases

Nickel-Plated Brass-Series: Straight Fittings

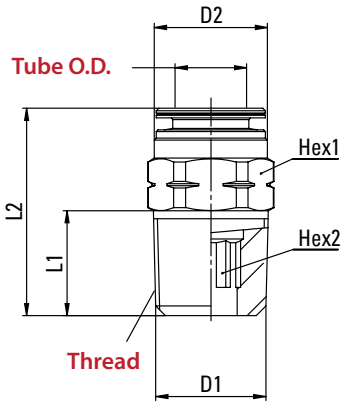

Male Straight

Hex Male Straight Fittings feature a hex outer shape, allowing for simplified installation. These fittings are composed of nickel-plated brass.

Fractional Tube Sizes

Model	Tube OD	Thread	Package Qty.	Stock	Hex	Length	Weight
B18-1032M	1/8”	10-32 Male	10	No	3/32”	0.65” (16.5mm)	0.08oz (2.26g)
B18-01M		1/8” Male NPT		Yes		0.72” (18.2mm)	0.33oz (9.35g)
B532-1032M	5/32”	10-32 Male	10	Yes	3/32”	0.78” (19.8mm)	0.16oz (4.53g)
B532-01M		1/8” Male NPT			7/16”	0.72” (18.2mm)	0.33oz (9.35g)
B532-02M		1/4” Male NPT		No	9/16”	0.94” (23.8mm)	0.70oz (19.8g)
B14-1032M	1/4”	10-32 Male	10	Yes	3/32”	0.72” (18.2mm)	0.33oz (9.35g)
B14-01M		1/8” Male NPT			1/2”	0.86” (21.8mm)	0.37oz (10.4g)
B14-02M		1/4” Male NPT			9/16”	0.96” (24.3mm)	0.65oz (18.4g)
B516-01M	5/16”	1/8” Male NPT	10	Yes	9/16”	1.04” (26.4mm)	0.52oz (14.7g)
B516-02M		1/4” Male NPT				1.04” (26.4mm)	0.56oz (15.8g)
B516-03M		3/8” Male NPT			11/16”	0.98” (24.8mm)	0.98oz (27.7g)
B38-01M	3/8”	1/8” Male NPT	10	Yes	11/16”	1.12” (28.4mm)	0.79oz (22.3g)
B38-02M		1/4” Male NPT				1.26” (32.0mm)	0.95oz (26.9g)
B38-03M		3/8” Male NPT				1.04” (26.4mm)	0.90oz (25.5g)
B38-04M		1/2” Male NPT			7/8”	1.20” (30.4mm)	1.97oz (55.8g)
B12-02M	1/2”	1/4” Male NPT	10	Yes	13/16”	1.35” (34.2mm)	1.25oz (35.4g)
B12-03M		3/8” Male NPT				1.61” (40.8mm)	0.97oz (27.4g)
B12-04M		1/2” Male NPT			7/8”	1.20” (30.4mm)	1.61oz (45.6g)

Male Straight (Continued)

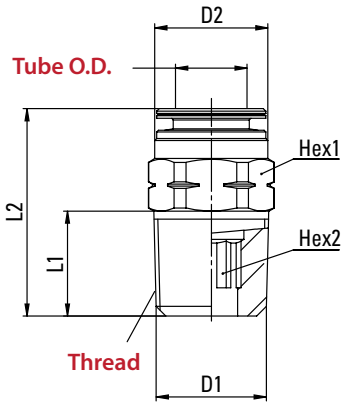

Metric Tube Sizes

Model	Tube OD	Thread	Package Qty.	Stock	Hex	Length	Weight
B04-01M-PT	4mm	1/8" Male BSPT (R)	10	Yes	10mm	0.62" (16.0mm)	0.19oz (5.50g)
B04-02M-PT		1/4" Male BSPT (R)			14mm	0.80" (20.5mm)	0.56oz (16.1g)
B04-01M-PP		1/8" Male BSPP (G)			9mm	0.51" (13.0mm)	0.21oz (6.00g)
B04-02M-PP		1/4" Male BSPP (G)		No		0.62" (16.0mm)	0.42oz (12.0g)
B04-M5M		M5 x 0.8		Yes	2.5mm	0.74" (19.0mm)	0.16oz (4.60g)
B04-M6M		M6 x 1.0		No	3mm	0.76" (19.5mm)	0.15oz (4.30g)
B06-01M-PT	6mm	1/8" Male BSPT (R)	10	Yes	12mm	0.82" (21.0mm)	0.30oz (8.70g)
B06-02M-PT		1/4" Male BSPT (R)			14mm	0.80" (20.5mm)	0.49oz (14.0g)
B06-01M-PP		1/8" Male BSPP (G)			12mm	0.76" (19.5mm)	0.31oz (9.00g)
B06-02M-PP		1/4" Male BSPP (G)				0.76" (19.5mm)	0.44oz (12.7g)
B06-M5M		M5 x 0.8		No	2.5mm	0.86" (22.0mm)	0.30oz (8.60g)
B06-M6M		M6 x 1.0			3mm		
B06-12x1.25*M		M12 x 1.25			12mm	0.82" (21.0mm)	0.41oz (11.8g)
B06-12x1.5*M		M12 x 1.50					0.45oz (12.9g)
B08-01M-PT	8mm	1/8" Male BSPT (R)	10	Yes	14mm	0.98" (25.0mm)	0.46oz (13.2g)
B08-02M-PT		1/4" Male BSPT (R)				1.27" (32.5mm)	0.49oz (13.9g)
B08-03M-PT		3/8" Male BSPT (R)				0.89" (22.5mm)	0.83oz (23.6g)
B08-01M-PP		1/8" Male BSPP (G)			12mm	0.93" (23.5mm)	0.40oz (11.5g)
B08-02M-PP		1/4" Male BSPP (G)			14mm	0.84" (21.5mm)	0.47oz (13.5g)
B08-03M-PP		3/8" Male BSPP (G)				0.82" (21.0mm)	0.70oz (20.1g)
B10-02M-PT	10mm	1/4" Male BSPT (R)	10	Yes	16mm	1.20" (30.5mm)	0.71oz (20.2g)
B10-03M-PT		3/8" Male BSPT (R)			17mm	0.94" (24.0mm)	0.72oz (20.6g)
B10-04M-PT		1/2" Male BSPT (R)			22mm	1.06" (27.0mm)	1.68oz (47.5g)
B10-02M-PP		1/4" Male BSPP (G)			15mm	1.08" (27.5mm)	0.61oz (17.4g)
B10-03M-PP		3/8" Male BSPP (G)			16mm	0.98" (25.0mm)	0.79oz (22.6g)
B10-04M-PP		1/2" Male BSPP (G)		No		1.00" (25.5mm)	1.21oz (34.5g)
B12-02M-PT	12mm	1/4" Male BSPT (R)	10	Yes	19mm	1.25" (32.0mm)	0.84oz (24.0g)
B12-03M-PT		3/8" Male BSPT (R)				1.08" (27.5mm)	0.85oz (24.1g)
B12-04M-PT		1/2" Male BSPT (R)			22mm	1.08" (27.5mm)	1.49oz (42.3g)
B12-02M—PP		1/4" Male BSPP (G)		No	19mm	1.12" (28.5mm)	0.92oz (26.2g)
B12-03M-PP		3/8" Male BSPP (G)		Yes			1.02oz (29.0g)
B12-04M-PP		1/2" Male BSPP (G)		No		1.04" (26.5mm)	1.27oz (36.1g)
B14-03M-PT	14mm	3/8" Male BSPT (R)	10	Yes	14mm	1.39" (35.5mm)	1.41oz (40.1g)
B14-04M-PT		1/2" Male BSPT (R)				1.27" (32.5mm)	1.39oz (39.5g)
B14-03M-PP		3/8" Male BSPP (G)			22mm	1.25" (32.0mm)	1.32oz (37.5g)
B14-04M-PP		1/2" Male BSPP (G)		No			1.49oz (42.4g)

Technifit™ Push-to-Connect Fittings

Female Straight

Hex Female Straight Fittings feature a hex outer shape, allowing for simplified installation. These fittings are composed of nickel-plated brass.

Fractional Tube Sizes

Model	Tube OD	Thread	Package Qty.	Stock	Hex	Length	Weight
B532-01F	5/32"	1/8" Female NPT	10	Yes	9/16"	0.96" (24.3mm)	0.42oz (11.9g)
B14-01F	1/4"	1/8" Female NPT	10	Yes	9/16"	1.04" (26.4mm)	0.49oz (13.8g)
B14-02F		1/4" Female NPT			11/16"	1.22" (30.9mm)	0.93oz (26.3g)
B516-01F	5/16"	1/8" Female NPT	10	No	9/16"	1.03" (26.1mm)	0.70oz (19.8g)
B516-02F		1/4" Female NPT		Yes	11/16"	1.22" (30.9mm)	1.00oz (28.3g)
B38-02F	3/8"	1/4" Female NPT	10	Yes	11/16"	1.29" (32.7mm)	1.16oz (32.8g)
B38-03F		3/8" Female NPT			13/16"		1.34oz (37.9g)

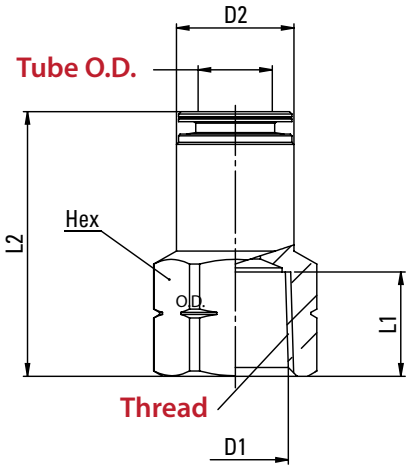

Metric Tube Sizes

Model	Tube OD	Thread	Package Qty.	Stock	Hex	Length	Weight
B04-01F-PP	4mm	1/8" Female BSPP (G)	10	No	9mm	0.92" (23.5mm)	0.35oz (10.0g)
B06-01F-PP	6mm	1/8" Female BSPP (G)	10	No	12mm	1.02" (26.0mm)	0.53oz (15.1g)
B06-02F-PP		1/4" Female BSPP (G)				1.18" (30.0mm)	0.65oz (18.5g)
B08-01F-PP	8mm	1/8" Female BSPP (G)	10	No	14mm	1.02" (26.0mm)	0.61oz (17.5g)
B08-02F-PP		1/4" Female BSPP (G)				1.18" (30.0mm)	0.71oz (20.2g)
B10-02F-PP	10mm	1/4" Female BSPP (G)	10	Yes	16mm	1.25" (32.0mm)	0.79oz (22.4g)
B10-03F-PP		3/8" Female BSPP (G)		No		1.31" (33.5mm)	1.06oz (30.3g)

Nickel-Plated Brass-Series: Elbow Fittings

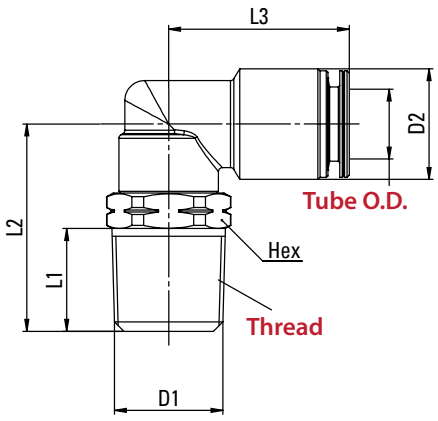

Swivel Male Elbow

Swivel Male Elbows feature a push-to-connect port arranged 90° from a swivel male thread. These fittings are constructed of nickel-plated brass.

Fractional Tube Sizes

Model	Tube OD	Thread	Package Qty.	Stock	Hex	Length	Weight
B18-1032ML	1/8"	10-32 Male	10	Yes	3/8"	0.64" (16.2mm)	0.28oz (7.93g)
B18-01ML		1/8" Male NPT			7/16"	0.72" (18.2mm)	0.37oz (10.4g)
B532-1032ML	5/32"	10-32 Male	10	Yes	3/8"	0.64" (16.2mm)	0.35oz (9.92g)
B532-01ML		1/8" Male NPT			7/16"	0.72" (18.2mm)	0.44oz (12.4g)
B532-02ML		1/4" Male NPT			9/16"	1.02" (25.9mm)	0.79oz (22.3g)
B14-01ML	1/4"	1/8" Male NPT	10	Yes	1/2"	0.82" (20.8mm)	0.68oz (19.2g)
B14-02ML		1/4" Male NPT			9/16"	1.02" (25.9mm)	0.88oz (24.9g)
B516-01ML	5/16"	1/8" Male NPT	10	Yes	1/2"	0.82" (20.8mm)	0.81oz (22.9g)
B516-02ML		1/4" Male NPT			9/16"	1.02" (25.9mm)	1.00oz (28.3g)
B516-03ML		3/8" Male NPT			11/16"	1.12" (28.4mm)	1.41oz (39.9g)
B38-01ML	3/8"	1/8" Male NPT	10	Yes	11/16	0.94" (23.8mm)	1.37oz (38.8g)
B38-02ML		1/4" Male NPT				1.12" (28.4mm)	1.49oz (42.2g)
B38-03ML		3/8" Male NPT					1.53oz (43.3g)
B38-04ML		1/2" Male NPT			7/8"	1.33" (33.7mm)	2.18oz (61.8g)
B12-02ML	1/2"	1/4" Male NPT	10	Yes	13/16"	1.25" (31.7mm)	2.38oz (67.4g)
B12-03ML		3/8" Male NPT					2.22oz (62.9g)
B12-04ML		1/2" Male NPT			7/8"	1.43" (36.2mm)	2.66oz (75.4g)

Swivel Male Elbow (Continued)

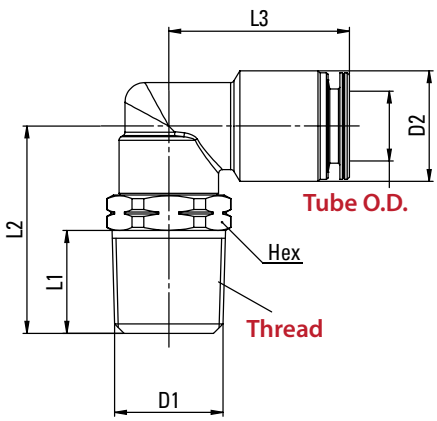

Metric Tube Sizes

Model	Tube OD	Thread	Package Qty.	Stock	Hex	Length	Weight
B04-01ML-PT	4mm	1/8" Male BSPT (R)	10	Yes	10mm	0.68" (17.5mm)	0.38oz (10.8g)
B04-02ML-PT		1/4" Male BSPT (R)		No	14mm	0.94" (24.0mm)	0.73oz (20.9g)
B04-01ML-PP		1/8" Male BSPP (G)		Yes	13mm	0.70" (18.0mm)	0.55oz (15.7g)
B04-02ML-PP		1/4" Male BSPP (G)				0.84" (21.5mm)	0.67oz (19.0g)
B04-M5ML		M5 x 0.8			9mm	0.55" (14.0mm)	0.31oz (8.80g)
B04-M6ML		M6 x 1.0		No		0.57" (14.5mm)	0.30oz (8.70g)
B06-01ML-PT	6mm	1/8" Male BSPT (R)	10	Yes	13mm	0.78" (20.0mm)	0.68oz (19.4g)
B06-02ML-PT		1/4" Male BSPT (R)			14mm	0.94" (24.0mm)	0.81oz (23.1g)
B06-01ML-PP		1/8" Male BSPP (G)			13mm	0.70" (18.0mm)	0.65oz (18.5g)
B06-02ML-PP		1/4" Male BSPP (G)				0.84" (21.5mm)	0.76oz (21.8g)
B06-M5ML		M5 x 0.8		No	9mm	0.55" (14.0mm)	0.41oz (11.9g)
B06-M6ML		M6 x 1.0				0.57" (14.5mm)	0.42oz (12.0g)
B06-12x1.25*ML		M12 x 1.25			13mm	0.84" (21.5mm)	0.79oz (22.2g)
B06-12x1.5*ML		M12 x 1.50					0.77oz (22.1g)
B08-01ML-PT	8mm	1/8" Male BSPT (R)	10	Yes	13mm	0.78" (20.0mm)	0.80oz (22.8g)
B08-02ML-PT		1/4" Male BSPT (R)			14mm	0.94" (24.0mm)	0.93oz (26.4g)
B08-03ML-PT		3/8" Male BSPT (R)			18mm	1.06" (27.0mm)	1.38oz (39.2g)
B08-01ML-PP		1/8" Male BSPP (G)			13mm	0.70" (18.0mm)	0.77oz (22.0g)
B08-02ML-PP		1/4" Male BSPP (G)				0.84" (21.5mm)	0.90oz (25.3g)
B08-03ML-PP		3/8" Male BSPP (G)			16mm	1.00" (25.5mm)	1.32oz (37.7g)
B10-02ML-PT	10mm	1/4" Male BSPT (R)	10	Yes	18mm	1.04" (26.5mm)	1.36oz (38.6g)
B10-03ML-PT		3/8" Male BSPT (R)				0.94" (27.0mm)	1.44oz (41.0g)
B10-02ML-PP		1/4" Male BSPP (G)			16mm	0.86" (22.0mm)	1.19oz (34.0g)
B10-03ML-PP		3/8" Male BSPP (G)		No		1.00" (25.5mm)	1.39oz (39.5g)
B10-04ML-PP		1/2" Male BSPP (G)				1.08"(27.5mm)	1.52oz (43.2g)
B12-03ML-PT	12mm	3/8" Male BSPT (R)	10	Yes	20mm	1.20" (30.5mm)	2.15oz (61.8g)
B12-04ML-PT		1/2" Male BSPT (R)		No	22mm	1.31" (33.5mm)	2.52oz (71.5g)
B12-02ML-PP		1/4" Male BSPP (G)		Yes	20mm	1.00" (25.5mm)	2.06oz (58.5g)
B12-03ML-PP		3/8" Male BSPP (G)		No		1.02" (26.0mm)	2.01oz (57.0g)
B12-04ML-PP		1/2" Male BSPP (G)		Yes		1.20" (30.5mm)	2.29oz (65.1g)
B14-03ML-PT	14mm	3/8" Male BSPT (R)	10	No	20mm	1.20" (30.5mm)	2.33oz (66.2g)
B14-04ML-PT		1/2" Male BSPT (R)			22mm	1.31" (33.5mm)	2.63oz (74.6g)
B14-03ML-PP		3/8" Male BSPP (G)			20mm	1.22" (31.0mm)	2.17oz (61.6g)
B14-04ML-PP		1/2" Male BSPP (G)					2.46oz (69.9g)

Rigid Male Elbow

Swivel Male Elbows feature a push-to-connect port arranged 90° from a rigid male thread. These fittings are constructed of nickel-plated brass.

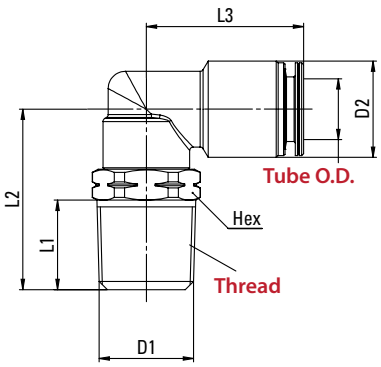

Fractional Tube Sizes

Model	Tube OD	Thread	Package Qty.	Stock	Hex	Length	Weight
B532-01MLR	5/32"	1/8" Male NPT	10	Yes	8mm	0.61" (15.4mm)	0.31oz (8.78g)
B14-01MLR	1/4"	1/8" Male NPT	10	Yes	10mm	0.62" (15.7mm)	0.45oz (12.7g)
B14-02MLR		1/4" Male NPT				0.78" (19.8mm)	0.60oz (17.0g)
B516-01MLR	5/16"	1/8" Male NPT	10	Yes	12mm	0.66" (16.7mm)	0.72oz (20.4g)
B516-02MLR		1/4" Male NPT		No		0.82" (20.8mm)	0.79oz (22.3g)
B38-02MLR	3/8"	1/4" Male NPT	10	Yes	14mm	0.88" (22.3mm)	1.04oz (29.4g)
B38-03MLR		3/8" Male NPT		No			1.18oz (33.4g)

Male Tube Sizes

Model	Tube OD	Thread	Package Qty.	Stock	Hex	Length	Weight
B04-01MLR-PT	4mm	1/8" Male BSPT (R)	10	No	9mm	0.59" (15.0mm)	0.28oz (8.10g)
B04-02MLR-PT		1/4" Male BSPT (R)				0.72" (18.5mm)	0.49oz (13.9g)
B06-01MLR-PT	6mm	1/8" Male BSPT (R)	10	Yes	10mm	0.59" (15.0mm)	0.46oz (13.2g)
B06-02MLR-PT		1/4" Male BSPT (R)		No		0.72" (18.5mm)	0.58oz (16.7g)
B08-01MLR-PT	8mm	1/8" Male BSPT (R)	10	No	12mm	0.74" (19.0mm)	0.69oz (19.6g)
B08-02MLR-PT		1/4" Male BSPT (R)				0.82" (21.0mm)	0.79oz (22.6g)
B10-02MLR-PT	10mm	1/4" Male BSPT (R)	10	No	14mm	0.86" (22.0mm)	0.95oz (27.1g)
B10-03MLR-PT		3/8" Male BSPT (R)				0.88" (22.5mm)	1.13oz (32.1g)

Technifit™ Push-to-Connect Fittings

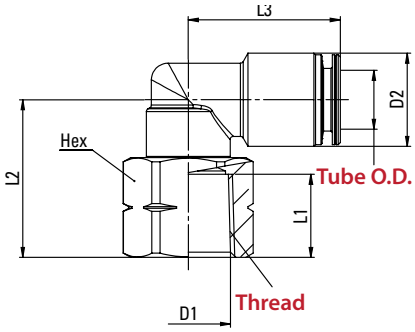

Swivel Female Elbow

Swivel Female Elbows feature a push-to-connect port arranged 90° from a swivel female thread. These fittings are constructed of nickel-plated brass.

Fractional Tube Sizes

Model	Tube OD	Thread	Package Qty.	Stock	Hex	Length	Weight
B532-01FL	5/32"	1/8" Female NPT	10	No	9/16"	0.76" (19.3mm)	0.74oz (20.9g)
B14-01FL	1/4"	1/8" Female NPT	10	No	9/16"	0.76" (19.3mm)	0.81oz (22.9g)
B14-02FL		1/4" Female NPT		Yes	11/16"	0.92" (23.3mm)	1.12oz (31.7g)
B516-01FL	5/16"	1/8" Female NPT	10	No	9/16"	0.76" (19.3mm)	0.93oz (26.3g)
B516-02FL		1/4" Female NPT			11/16"	0.92" (23.3mm)	1.28oz (36.2g)
B38-02FL	3/8"	1/4" Female NPT	10	Yes	11/16"	1.00" (25.4mm)	1.57oz (44.5g)
B38-03FL		3/8" Female NPT		No	13/16"		1.72oz (48.7g)

Male Tube Sizes

Model	Tube OD	Thread	Package Qty.	Stock	Hex	Length	Weight
B04-01FL-PT	4mm	1/8" Male BSPT (R)	10	No	13mm	0.68" (17.5mm)	0.61oz (17.3g)
B06-01FL-PT	6mm	1/8" Male BSPT (R)	10	Yes	13mm	0.68" (17.5mm)	0.69oz (19.7g)
B06-02FL-PT		1/4" Male BSPT (R)		No	16mm	0.84" (21.5mm)	0.89oz (25.4g)
B08-01FL-PT	8mm	1/8" Male BSPT (R)	10	No	13mm	0.68" (17.5mm)	0.81oz (23.1g)
B08-02FL-PT		1/4" Male BSPT (R)			16mm	0.84" (21.5mm)	1.02oz (29.1g)
B10-02FL-PT	10mm	1/4" Male BSPT (R)	10	No	16mm	1.02" (26.0mm)	1.25oz (35.6g)
B10-03FL-PT		3/8" Male BSPT (R)			20mm		1.53oz (43.5g)

Nickel-Plated Brass-Series: Tee Fittings

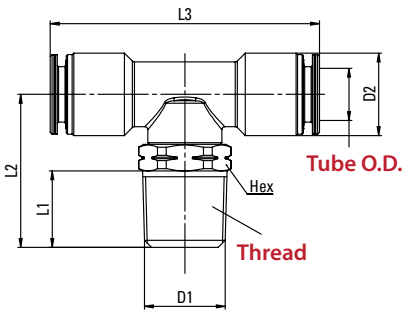

Swivel Male Branch Tee

Swivel Male Branch Tees feature two opposing push-to-connect ports, with a male swivel thread arranged 90°. These fittings are constructed of nickel-plated brass.

Fractional Tube Sizes

Model	Tube OD	Thread	Package Qty.	Stock	Hex	Length	Weight
B18-01MT	1/8"	1/8" Male NPT	10	Yes	7/16"	1.14" (28.9mm)	0.67oz (18.9g)
B532-01MT	5/32"	1/8" Male NPT	10	Yes	1/2"	1.49" (37.8mm)	0.78oz (22.1g)
B532-02MT		1/4" Male NPT			9/16"		0.97oz (27.4g)
B14-01MT	1/4"	1/8" Male NPT	10	Yes	1/2"	1.69" (42.9mm)	0.91oz (25.7g)
B14-02MT		1/4" Male NPT			9/16"		1.07oz (30.3g)
B516-01MT	5/16"	1/8" Male NPT	10	Yes	1/2"	1.73" (43.9mm)	1.11oz (32.3g)
B516-02MT		1/4" Male NPT			9/16"		1.30oz (36.8g)
B38-02MT	3/8"	1/4" Male NPT	10	Yes	11/16"	1.96" (49.7mm)	1.90oz (53.8g)
B38-03MT		3/8" Male NPT					1.94oz (54.9g)
B12-02MT	1/2"	1/4" Male NPT	10	Yes	13/16"	2.16" (54.8mm)	2.75oz (77.9g)
B12-03MT		3/8" Male NPT			7/8"		3.17oz (89.8g)

Metric Tube Sizes

Model	Tube OD	Thread	Package Qty.	Stock	Hex	Length	Weight
B04-01MT-PT	4mm	1/8" Male BSPT (R)	10	Yes	13mm	1.53" (39.0mm)	0.75oz (21.5g)
B04-02MT-PT		1/4" Male BSPT (R)			14mm		0.90oz (25.6g)
B04-01MT-PP		1/8" Male BSPP (G)		No	13mm		0.71oz (20.2g)
B04-02MT-PP		1/4" Male BSPP (G)					0.84oz (23.9g)
B06-01MT-PT	6mm	1/8" Male BSPT (R)	10	No	13mm	1.73" (44.0mm)	0.92oz (26.3g)
B06-02MT-PT		1/4" Male BSPT (R)		Yes	14mm		1.07oz (30.4g)
B06-01MT-PP		1/8" Male BSPP (G)		No	13mm		0.88oz (25.2g)
B06-02MT-PP		1/4" Male BSPP (G)					1.02oz (29.1g)
B08-01MT-PT	8mm	1/8" Male BSPT (R)	10	Yes	14mm	1.77" (45.0mm)	1.09oz (31.1g)
B08-02MT-PT		1/4" Male BSPT (R)					1.24oz (35.3g)
B08-03MT-PT		3/8" Male BSPT (R)				1.81" (46.0mm)	1.73oz (49.1g)
B08-01MT-PP		1/8" Male BSPP (G)				1.77" (45.0mm)	1.08oz (30.7g)
B08-02MT-PP		1/4" Male BSPP (G)		No			1.18oz (33.6g)
B08-03MT-PP		3/8" Male BSPP (G)				1.81" (46.0mm)	1.63oz (46.4g)
B10-02MT-PT	10mm	1/4" Male BSPT (R)	10	Yes	18mm	1.92" (49.0mm)	1.76oz (50.0g)
B10-03MT-PT		3/8" Male BSPT (R)					1.82oz (51.6g)
B10-02MT-PP		1/4" Male BSPP (G)		No	16mm	1.81" (46.0mm)	1.56oz (44.4g)
B10-03MT-PP		3/8" Male BSPP (G)				1.92" (49.0mm)	1.75oz (49.7g)
B12-03MT-PT	12mm	3/8" Male BSPT (R)	10	Yes	20mm	2.24" (57.0mm)	2.82oz (80.0g)
B12-04 MT-PT		1/2" Male BSPT (R)			22mm		2.94oz (83.5g)
B12-03MT-PP		3/8" Male BSPP (G)		No	20mm		2.65oz (75.3g)
B12-04 MT-PP		1/2" Male BSPP (G)					2.89oz (82.0g)

Technifit™ Push-to-Connect Fittings

Swivel Male Run Tee

Swivel Male Run Tees feature a push-to-connect port opposing a male swivel thread, with a push-to-connect port arranged 90°. These fittings are constructed of nickel-plated brass.

Fractional Tube Sizes

Model	Tube OD	Thread	Package Qty.	Stock	Hex	Length	Weight
B18-01RT	1/8"	1/8" Male NPT	10	No	7/16"	1.47" (37.3mm)	0.68oz (19.2g)
B532-01RT	5/32"	1/8" Male NPT	10	Yes	1/2"	1.57" (39.8mm)	0.81oz (22.9g)
B532-02RT		1/4" Male NPT		No	9/16"	1.77" (44.9mm)	0.98oz (27.7g)
B14-01RT	1/4"	1/8" Male NPT	10	Yes	1/2"	1.67" (42.4mm)	0.93oz (26.3g)
B14-02RT		1/4" Male NPT			9/16"	1.87" (47.4mm)	1.09oz (30.9g)
B516-01RT	5/16"	1/8" Male NPT	10	No	1/2"	1.69" (42.9mm)	1.12oz (31.7g)
B516-02RT		1/4" Male NPT		Yes	9/16"	1.88" (47.7mm)	1.32oz (37.4g)
B38-02RT	3/8"	1/4" Male NPT	10	Yes	11/16"	2.10" (53.3mm)	1.90oz (53.8g)
B38-03RT		3/8" Male NPT			11/16"		1.94oz (54.9g)
B12-03RT	1/2"	3/8" Male NPT	10	Yes	13/16'	2.34" (59.4mm)	2.73oz (77.3g)
B12-04RT		1/2" Male NPT		No	7/8"	2.51" (63.7mm)	3.18oz (90.1g)

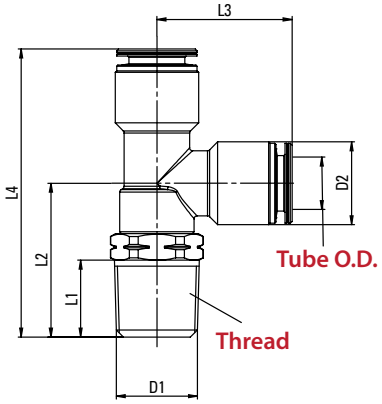

Metric Tube Sizes

Model	Tube OD	Thread	Package Qty.	Stock	Hex	Length	Weight
B04-01RT-PT	4mm	1/8" Male BSPT (R)	10	No	13mm	1.55" (39.5mm)	0.77oz (22.0g)
B04-02RT-PT		1/4" Male BSPT (R)			14mm	1.71" (43.5mm)	0.89oz (25.5g)
B04-01RT-PP		1/8" Male BSPP (G)			13mm	1.47" (37.5mm)	0.73oz (20.5g)
B04-02RT-PP		1/4" Male BSPP (G)				1.61" (41.0mm)	0.84oz (24.0g)
B06-01RT-PT	6mm	1/8" Male BSPT (R)	10	No	13mm	1.65" (42.0mm)	0.97oz (27.5g)
B06-02RT-PT		1/4" Male BSPT (R)			14mm	1.81" (46.0mm)	1.09oz (31.0g)
B06-01RT-PP		1/8" Male BSPP (G)			13mm	1.57" (40.0mm)	0.91oz (26.0g)
B06-02RT-PP		1/4" Male BSPP (G)				1.71" (435mm)	1.04oz (29.5g)
B08-01RT-PT	8mm	1/8" Male BSPT (R)	10	No	13mm	1.67" (42.5mm)	1.09oz (31.0g)
B08-02RT-PT		1/4" Male BSPT (R)			14mm	1.83" (46.5mm)	1.23oz (35.0g)
B08-01RT-PP		3/8" Male BSPT (R)			13mm	1.59" (40.5mm)	1.05oz (30.0g)
B08-02RT-PP		1/8" Male BSPP (G)				1.73" (44.0mm)	1.18oz (33.5g)
B10-02RT-PT	10mm	1/4" Male BSPP (G)	10	No	18mm	2.06" (52.5mm)	1.76oz (50.0g)
B10-03RT-PT		3/8" Male BSPP (G)				2.08" (53.0mm)	1.79oz (51.0g)
B10-02RT-PP		1/4" Male BSPT (R)			16mm	1.88" (48.0mm)	1.55oz (44.0g)
B10-03RT-PP		3/8" Male BSPT (R)				2.02" (51.5mm)	1.72oz (49.0g)
B12-03RT-PT	12mm	1/4" Male BSPP (G)	10	No	20mm	2.32" (59.0mm)	2.64oz (75.0g)
B12-04RT-PT		3/8" Male BSPP (G)			22mm	2.44" (62.0mm)	2.92oz (83.5g)
B12-03RT-PP		3/8" Male BSPT (R)			20mm	2.14" (54.5mm)	2.57oz (73.0g)
B12-04RT-PP		1/2" Male BSPT (R)				2.32" (59.0mm)	2.71oz (77.0g)

Nickel-Plated Brass-Series: Union Fittings

Straight Union (Reducers Included)

Straight Unions feature two opposing push-to-connect ports, allowing two sections of tubing to be joined. These fittings are constructed of nickel-plated brass.

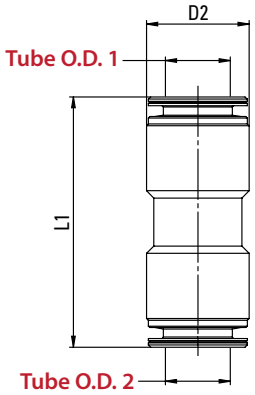

Fractional Tube Sizes

Model	Tube 1 OD	Tube 2 OD	Package Qty.	Stock	Length	Weight
B18U	1/8"	1/8"	10	Yes	0.86" (21.8mm)	0.10oz (2.83g)
B532U(4MM)	5/32"	5/32"	10	Yes	1.06" (26.9mm)	0.26oz (7.37g)
B14U	1/4"	1/4"	10	Yes	1.29" (32.7mm)	0.47oz (13.3g)
B516U(8MM)	5/16"	5/16"	10	Yes	1.29" (32.7mm)	0.63oz (17.8g)
B38U	3/8"	3/8"	10	Yes	1.45" (36.8mm)	0.88oz (24.9g)
B12U	1/2"	1/2"	10	Yes	1.53" (38.8mm)	1.11oz (31.1g)

Metric Tube Sizes

Model	Tube 1 OD	Tube 2 OD	Package Qty.	Stock	Length	Weight
B532U(4MM)	4mm	4mm	10	Yes	1.10" (28.0mm)	0.09oz (2.70g)
B06U	6mm	6mm	10	Yes	1.31" (33.5mm)	0.52oz (15.0g)
B06-04U		4mm		No	1.22" (31.0mm)	0.51oz (14.7g)
B516U(8MM)	8mm	8mm	10	Yes	1.33" (34.0mm)	0.63oz (18.0g)
B08-06U		6mm		Yes		0.74oz (21.0g)
B10U	10mm	10mm	10	Yes	1.51" (38.5mm)	0.79oz (22.5g)
B10-08U		8mm		No	1.43" (36.5mm)	0.88oz (25.2g)
B12MU	12mm	12mm	10	Yes	1.61" (41.0mm)	1.29oz (36.6g)
B14MU	14mm	14mm	10	No	1.85" (47.0mm)	1.67oz (47.4g)

Union Elbow

Union Elbows feature two push-to-connect ports arranged 90° apart, allowing two sections of tubing to be joined. These fittings are constructed of nickel-plated brass.

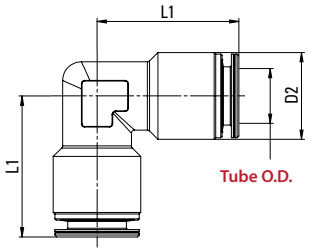

Fractional Tube Sizes

Model	Tube 1 OD	Tube 2 OD	Package Qty.	Stock	Length	Weight
B18UL	1/8"	1/8"	10	Yes	0.59" (14.9mm)	0.15oz (4.25g)
B532UL(4MM)	5/32"	5/32"	10	Yes	0.66" (16.7mm)	0.33oz (9.35g)
B14UL	1/4"	1/4"	10	Yes	0.78" (19.8mm)	0.54oz (15.3g)
B516UL(8MM)	5/16"	5/16"	10	Yes	0.84" (21.3mm)	0.82oz (23.2g)
B38UL	3/8"	3/8"	10	Yes	0.96" (24.3mm)	1.12oz (31.7g)
B12UL	1/2"	1/2"	10	Yes	1.00" (25.4mm)	1.81oz (51.3g)

Metric Tube Sizes

Model	Tube OD	Tube 2 OD	Package Qty.	Stock	Length	Weight
B532UL(4MM)	4mm	4mm	10	Yes	0.68" (17.5mm)	0.31oz (9.00g)
B06UL	6mm	6mm	10	Yes	0.80" (20.5mm)	0.58oz (16.5g)
B516UL(8MM)	8mm	8mm	10	Yes	0.88" (22.5mm)	0.77oz (22.0g)
B10UL	10mm	10mm	10	Yes	0.98" (25.0mm)	1.04oz (29.5g)
B12MUL	12mm	12mm	10	Yes	1.04" (26.5mm)	1.71oz (48.5g)
B14MUL	14mm	14mm	10	No	1.24" (31.5mm)	2.04oz (58.0g)

Technifit™ Push-to-Connect Fittings

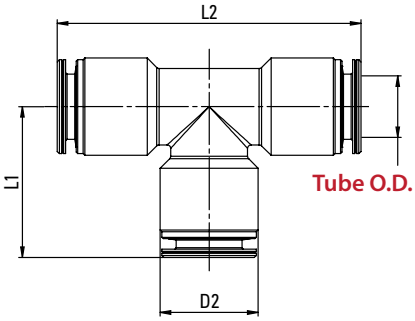

Union Tee

Union Tees feature two opposing push-to-connect ports with a third arranged 90° apart. These fittings are constructed of nickel-plated brass.

Fractional Tube Sizes

Model	Tube 1 OD	Tube 2 OD	Package Qty.	Stock	Length	Weight
B18UT	1/8"	1/8"	10	Yes	1.18" (29.9mm)	0.19oz (5.38g)
B532UT(4MM)	5/32"	5/32"	10	Yes	1.33" (33.7mm)	0.44oz (12.4g)
B14UT	1/4"	1/4"	10	Yes	1.57" (42.4mm)	0.72oz (20.4g)
B516UT(8MM)	5/16"	5/16"	10	Yes	1.69" (42.9mm)	0.98oz (27.7g)
B38UT	3/8"	3/8"	10	Yes	1.92" (48.7mm)	1.48oz (41.9g)
B12UT	1/2"	1/2"	10	Yes	2.00" (50.8mm)	2.08oz (58.9g)

Metric Tube Sizes

Model	Tube OD	Tube 2 OD	Package Qty.	Stock	Length	Weight
B532UT(4MM)	4mm	4mm	10	Yes	1.37" (35.0mm)	0.44oz (12.5g)
B06UT	6mm	6mm	10	Yes	1.57" (40.0mm)	0.79oz (22.5g)
B516UT(8MM)	8mm	8mm	10	Yes	1.65" (42.0mm)	1.00oz (28.4g)
B10UT	10mm	10mm	10	Yes	1.92" (49.0mm)	1.38oz (39.2g)
B12MUT	12mm	12mm	10	Yes	2.04" (52.0mm)	2.16oz (61.3g)
B14MUT	14mm	14mm	10	No	2.40" (61.0mm)	2.71oz (77.1g)

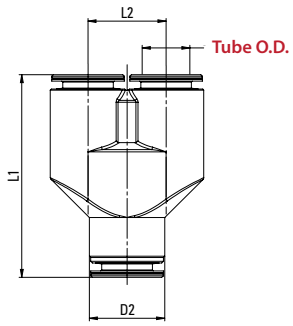

Union "Y" (Reducers Included)

Union "Y" fittings feature a single push-to-connect port opposed to two parallel push-to-connect ports. These fittings are constructed of nickel-plated brass.

Fractional Tube Sizes

Model	Tube 1 OD	Tube 2 OD	Package Qty.	Stock	Length	Weight
B18UY	1/8"	1/8"	10	Yes	1.18" (29.9mm)	0.19oz (5.38g)
B532UY(4MM)	5/32"	5/32"	10	Yes	1.33" (33.7mm)	0.44oz (12.4g)
B14UY	1/4"	1/4"	10	Yes	1.57" (42.4mm)	0.72oz (20.4g)
B516UY(6MM)	5/16"	5/16"	10	Yes	1.69" (42.9mm)	0.98oz (27.7g)

Metric Tube Sizes

Model	Tube 1 OD	Tube 2 OD	Package Qty.	Stock	Length	Weight
B532UY(4MM)	4mm	4mm	10	Yes	1.16" (29.5mm)	0.47oz (13.5g)
B06UY	6mm	6mm	10	Yes	1.41" (36.0mm)	1.12oz (32.0g)
B06-04UY		4mm		No		1.27oz (36.1g)
B516UY(8MM)	8mm	8mm	10	Yes	1.47" (37.5mm)	1.49oz (42.5g)
B08-06UY		6mm		No		1.80oz (51.1g)
B10UY	10mm	10mm	10	No	1.75" (44.5mm)	2.21oz (62.7g)
B10-08UY		8mm			1.73" (44.0mm)	2.64oz (74.9g)

Nickel-Plated Brass-Series: Plug-In Reducers

Plug-In Tube Reducer

Plug-In Tube Reducers feature a plug-in stem opposing a push-to-connect port of a different size.

Fractional Tube Sizes

Model	Tube 1 OD	Tube 2 OD	Package Qty.	Stock	Length	Weight
B18-532R	1/8"	5/32"	10	No	1.14" (28.9mm)	0.08oz (2.26g)
B532-14R	5/32"	1/4"	10	Yes	1.20" (30.4mm)	0.26oz (7.37g)
B14-516R	1/4"	5/16"	10	No	1.29" (32.7mm)	0.40oz (11.3g)
B14-38R		3/8"		Yes	1.37" (34.7mm)	0.47oz (13.3g)
B14-12R		1/2"		No		0.88oz (24.9g)
B516-38R	5/16"	3/8"	10	Yes	1.37" (34.7mm)	0.54oz (15.3g)
B38-12R	3/8"	1/2"	10	No	1.41" (35.8mm)	0.86oz (24.3g)

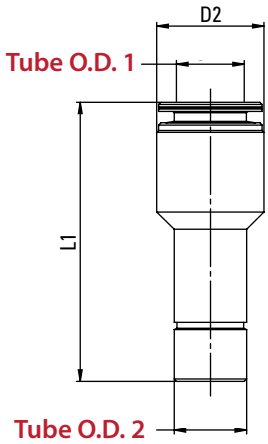

Metric Tube Sizes

Model	Tube 1 OD	Tube 2 OD	Package Qty.	Stock	Length	Weight
B04-06R	4mm	6mm	10	Yes	1.31" (33.5mm)	0.24oz (7.00g)
B04-08R		8mm		No		0.35oz (10.0g)
B04-10R		10mm			1.24" (31.5mm)	0.52oz (15.0g)
B04-12R		12mm			1.27" (32.5mm)	0.86oz (24.5g)
B06-04R	6mm	4mm	10	Yes	1.39" (35.5mm)	0.35oz (10.0g)
B06-08R		8mm		No		0.40oz (11.5g)
B06-10R		10mm			1.43" (36.5mm)	0.58oz (16.5g)
B06-12R		12mm		Yes	1.39" (35.5mm)	0.79oz (22.2g)
B06-14R		14mm			1.47" (37.5mm)	0.88oz (25.0g)
B08-06R	8mm	6mm	10	No	1.55" (39.5mm)	0.47oz (13.5g)
B08-10R		10mm		Yes	1.45" (37.0mm)	0.52oz (15.0g)
B08-12R		12mm		No	1.53" (39.0mm)	0.81oz (23.0g)
B08-14R		14mm		Yes	1.51" (38.5mm)	1.11oz (31.5g)
B10-12R	10mm	12mm	10	No	1.65" (42.0mm)	0.70oz (20.0g)
B10-14R		14mm		Yes		1.04oz (29.5g)
B12-14R	12mm	14mm	10		1.69" (43.0mm)	0.84oz (24.0g)

Technifit™ Push-to-Connect Fittings

Plug-In Stem Adapter

Plug-In stem adapters feature an insert stem opposed to a male thread. These fittings are constructed of nickel-plated brass.

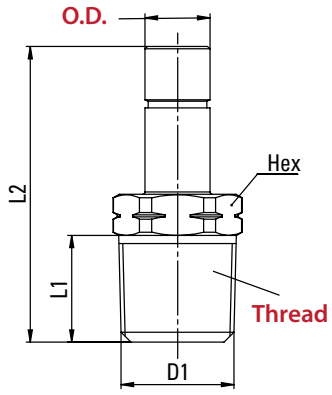

Fractional Tube Sizes

Model	Tube OD	Thread	Package Qty.	Stock	Length	Weight
B532-1032SA*	5/32"	10-32 Male	10	No	0.98" (24.8mm)	0.08oz (2.26g)
B532-01SA*		1/8" Male NPT			1.12" (28.4mm)	0.24oz (6.80g)
B532-02SA*		1/4" Male NPT			1.31" (33.2mm)	0.49oz (13.8g)
B14-01SA	1/4"	1/8" Male NPT	10	Yes	1.20" (30.4mm)	0.30oz (8.50g)
B14-02SA		1/4" Male NPT			1.39" (35.3mm)	0.52oz (14.7g)
B516-01SA	5/16"	1/8" Male NPT	10	Yes	1.27" (32.2mm)	0.31oz (8.78g)
B516-02SA		1/4" Male NPT		No	1.47" (37.3mm)	0.54oz (15.3g)
B38-02SA	3/8"	1/4" Male NPT	10	No	1.55" (39.3mm)	0.58oz (16.4g)
B38-03SA		3/8" Male NPT			1.57" (39.8mm)	0.81oz (22.9g)
B12-03SA	1/2"	3/8" Male NPT	10	No	1.69" (42.9mm)	0.89oz (25.2g)
B12-04SA		1/2" Male NPT			1.88" (47.7mm)	1.51oz (42.8g)

Metric Tube Sizes

Model	Tube OD	Thread	Package Qty.	Stock	Length	Weight
B04-01SA-PT	4mm	1/8" Male BSPT (R)	10	No	1.02" (26.0mm)	0.25oz (7.20g)
B04-02SA-PT		1/4" Male BSPT (R)			1.12" (28.5mm)	0.43oz (12.4g)
B04-M5SA		M5 x 0.80			0.94" (24.0mm)	0.11oz (3.20g)
B06-01SA-PT	6mm	1/8" Male BSPT (R)	10	No	1.10" (28.0mm)	0.29oz (8.50g)
B06-02SA-PT		1/4" Male BSPT (R)			1.20" (30.5mm)	0.48oz (13.7g)
B06-M5SA		M5 x 0.80			1.02" (26.0mm)	0.20oz (5.90g)
B08-01SA-PT	8mm	1/8" Male BSPT (R)	10	No	1.14" (29.0mm)	0.33oz (9.40g)
B08-02SA-PT		1/4" Male BSPT (R)			1.25" (31.5mm)	0.51oz (14.5g)
B10-02SA-PT	10mm	1/4" Male BSPT (R)	10	No	1.27" (32.5mm)	0.54oz (15.5g)
B10-03SA-PT		3/8" Male BSPT (R)			1.29" (33.0mm)	0.77oz (22.0g)
B12-03SA-PT	12mm	3/8" Male BSPT (R)	10	No	1.37" (35.0mm)	0.83oz (23.6g)
B12-04SA-PT		1/2" Male BSPT (R)			1.45" (37.0mm)	1.34oz (38.0g)

Nickel-Plated Brass-Series: Banjo Fittings

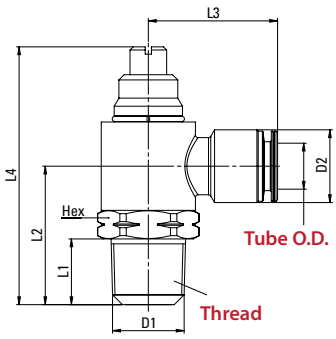

Swivel Banjo Fittings

Banjo Fittings are arranged with a push-to-connect port and a male thread in a 90° configuration allowing for installation in confined spaces.

Fractional Tube Sizes

Model	Tube OD	Thread	Package Qty.	Stock	Hex	Length	Weight
B532-01MBJ	5/32"	1/8" Male NPT	10	No	9/16"	1.20" (30.4mm)	1.01oz (28.6g)
B14-01MBJ	1/4"	1/8" Male NPT	10	No	9/16"	1.20" (30.4mm)	1.05oz (29.7g)
B14-02MBJ		1/4" Male NPT		Yes	11/16"	1.47" (37.3mm)	1.72oz (48.7g)
B516-01MBJ	5/16"	1/8" Male NPT	10	No	9/16"	1.20" (30.4mm)	1.07oz (30.3g)
B516-02MBJ		1/8" Male NPT			11/16"	1.47" (37.3mm)	1.74oz (49.3g)
B516-03MBJ		3/8" Male NPT			13/16"	1.61" (40.8mm)	1.76oz (49.8g)
B38-02MBJ	3/8"	1/4" Male NPT	10	No	11/16"	1.47" (37.3mm)	1.83oz (51.8g)
B38-03MBJ		3/8" Male NPT			13/16"	1.61" (40.8mm)	2.96oz (83.9g)

Metric Tube Sizes

Model	Tube OD	Thread	Package Qty.	Stock	Hex	Length	Weight
B04-01MBJ-PT	4mm	1/8" Male BSPT (R)	10	No	4mm	1.00" (25.5mm)	0.78oz (22.2g)
B04-M5MBJ		M5 x 0.80			3mm	0.74" (19.0mm)	0.35oz (10.1g)
B06-01MBJ-PT	6mm	1/8" Male BSPT (R)	10	No	4mm	0.88" (22.5mm)	0.86oz (24.4g)
B06-02MBJ-PT		1/4" Male BSPT (R)			5mm	0.94" (24.0mm)	1.38oz (39.3g)
B06-M5MBJ		M5 x 0.80			3mm	0.84" (21.5mm)	0.46oz (13.3g)
B08-01MBJ-PT	8mm	1/8" Male BSPT (R)	10	No	4mm	1.00" (25.5mm)	0.90oz (25.7g)
B08-02MBJ-PT		1/4" Male BSPT (R)			5mm	1.14" (29.0mm)	1.37oz (39.1g)
B10-02MBJ-PT	10mm	1/4" Male BSPT (R)	10	No	5mm	1.14" (29.0mm)	1.53oz (43.6g)
B10-03MBJ-PT		3/8" Male BSPT (R)			6mm	1.27" (32.5mm)	2.19oz (62.2g)
B12-03MBJ-PT	12mm	3/8" Male BSPT (R)	10	No	6mm	1.27" (32.5mm)	2.36oz (67.1g)
B12-04MBJ-PT		1/2" Male BSPT (R)			8mm	1.55" (39.5mm)	4.02oz (114g)

Nickel-Plated Brass-Series: Bulkhead Fittings

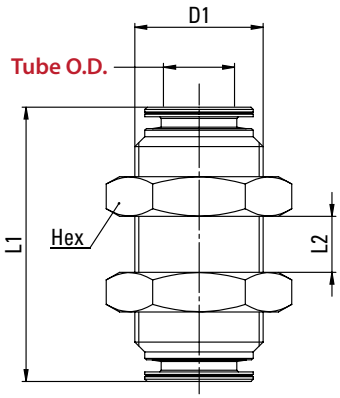

Bulkhead Union

Bulkhead Unions provide two opposing push-to-connect ports with threaded nuts allowing for installation through a panel or partition. These fittings are composed of nickel-plated brass.

Fractional Tube Sizes

Model	Tube 1 OD	Tube 2 OD	Package Qty.	Stock	Hex	Panel Hole	Length	Weight
B18BU	1/8"	1/8"	10	No	14mm	0.35" (9.00mm)	0.86" (21.8mm)	0.47oz (11.3g)
B532BU(4MM)	5/32"	5/32"	10	Yes	16mm	0.43" (11.0mm)	1.06" (26.9mm)	0.81oz (22.9g)
B14BU	1/4"	1/4"	10	Yes	18mm	0.51" (13.0mm)	1.29" (32.7mm)	1.14oz (32.3g)
B516BU(8MM)	5/16"	5/16"	10	Yes	20mm	0.59" (15.0mm)	1.29" (32.7mm)	1.37oz (38.8g)
B38BU	3/8"	3/8"	10	Yes	22mm	0.66" (17.0mm)	1.45" (36.8mm)	1.88oz (53.2g)
B12BU	1/2"	1/2"	10	Yes	26mm	0.82" (21.0mm)	1.53" (38.8mm)	1.94oz (54.9g)

Metric Tube Sizes

Model	Tube 1 OD	Tube 2 OD	Package Qty.	Stock	Hex	Panel Hole	Length	Weight
B532BU(4MM)	4mm	4mm	10	Yes	16mm	0.43" (11.0mm)	1.10" (28.0mm)	0.83oz (23.5g)
B06BU	6mm	6mm	10	Yes	18mm	0.51" (13.0mm)	1.33" (34.0mm)	1.16oz (33.0g)
B516BU(8MM)	8mm	8mm	10	Yes	20mm	0.59" (15.0mm)	1.33" (34.0mm)	1.39oz (39.5g)
B10BU	10mm	10mm	10	Yes	22mm	0.66" (17.0mm)	1.53" (39.0mm)	1.81oz (51.5g)
B12MBU	12mm	12mm	10	No	24mm	0.74" (19.0mm)	1.61" (41.0mm)	2.11oz (60.0g)

Nickel-Plated Brass-Series: Flow Controls

Slotted Adjustment Flow Control Elbow

Slotted Adjustment Flow Control Elbows allow for the adjustment of flow passing through, enabling installers to manage the speed of pneumatic equipment. Swivel Flow Control Elbows are equipped with a single push-to-connect port arranged 90° apart from a male thread.

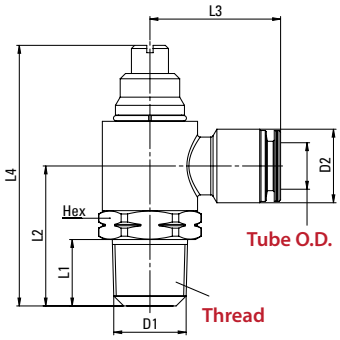

Fractional Tube Sizes

Model	Tube OD	Thread	Package Qty.	Stock	Hex	Length	Weight
BSC532-1032DC-O	5/32"	10-32 Male	10	No	3/8"	1.25" (31.7mm)	0.42oz (11.9g)
BSC532-01DC-O		1/8" Male NPT			9/16"	1.69" (42.9mm)	1.16oz (32.8g)
BSC14-01DC-O	1/4"	1/8" Male NPT	10	No	9/16"	1.69" (42.9mm)	1.23oz (34.8g)
BSC14-02DC-O		1/4" Male NPT		Yes	11/16"	2.00" (50.8mm)	2.16oz (61.2g)
BSC516-01DC-O	5/16"	1/8" Male NPT	10	No	9/16"	1.69" (42.9mm)	1.73oz (49.0g)
BSC516-02DC-O		1/4" Male NPT			11/16"	2.00" (50.8mm)	2.15oz (61.2g)
BSC38-02DC-O	3/8"	1/4" Male NPT	10	No	11/16"	2.00" (50.8mm)	2.31oz (65.4g)

Metric Tube Sizes

Model	Tube OD	Thread	Package Qty.	Stock	Hex	Length	Weight
BSC04-01DC-O-PP	4mm	1/8" Male BSPP (G)	10	No	9mm	1.25" (32.0mm)	1.02oz (29.0g)
BSC04-M5DC-O-PP		M5 x 0.80			6mm	1.00" (25.5mm)	0.42oz (12.0g)
BSC06-01DC-O-PP	6mm	1/8" Male BSPP (G)	10	No	9mm	1.25" (32.0mm)	0.95oz (27.0g)
BSC06-02DC-O-PP		1/4" Male BSPP (G)			10mm	1.57"(40.0mm)	1.72oz (49.0g)
BSC08-01DC-O-PP	8mm	1/8" Male BSPP (G)	10	No	9mm	1.25" (32.0mm)	1.09oz (31.0g)
BSC08-02DC-O-PP		1/4" Male BSPP (G)			10mm	1.57" (40.0mm)	1.72oz (49.0g)
BSC10-02DC-O-PP	10mm	1/4" Male BSPP (G)	10	No	10mm	1.57" (40.0mm)	1.86oz (53.0g)
BSC10-03DC-O-PP		3/8" Male BSPP (G)			14mm	1.96" (50.0mm)	3.03oz (86.0g)

Manual Knob Adjustment Flow Control Elbow

Manual Knob Flow Control Elbows allow for the adjustment of flow passing through, enabling installers to manage the speed of pneumatic equipment. Swivel Flow Control Elbows are equipped with a single push-to-connect port arranged 90° apart from a male thread. Manual Knob Flow Control Elbows are equipped with a knurled thumb-wheel for adjustments along with a locking ring.

Fractional Tube Sizes

Model	Tube OD	Thread	Package Qty.	Stock	Hex	Length	Weight
BSC532-1032HA-O	5/32"	10-32 Male	10	No	3/8"	1.69" (42.9mm)	0.42oz (11.9g)
BSC532-01HA-O		1/8" Male NPT			9/16"	2.12" (53.8mm)	1.02oz (28.9g)
BSC14-01HA-O	1/4"	1/8" Male NPT	10	Yes	9/16"	2.12" (53.8mm)	1.34oz (37.9g)
BSC14-02HA-O		1/4" Male NPT			11/16"	2.51" (63.7mm)	2.34oz (66.3g)
BSC516-01HA-O	5/16"	1/8" Male NPT	10	No	9/16"	2.12" (53.8mm)	1.73oz (49.0g)
BSC516-02HA-O		1/4" Male NPT			11/16"	2.51" (63.7mm)	2.36oz (66.9g)
BSC38-02HA-O	3/8"	1/4" Male NPT	10	Yes	11/16"	2.51" (63.7mm)	2.46oz (69.7g)

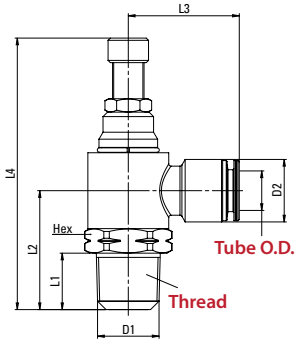

Metric Tube Sizes

Model	Tube OD	Thread	Package Qty.	Stock	Hex	Length	Weight
BSC04-01HA-O-PP	4mm	1/8" Male BSPP (G)	10	No	9mm	1.65" (42.0mm)	1.12oz (32.0g)
BSC04-M5HA-O-PP		M5 x 0.80			6mm	1.53" (39.0mm)	0.45oz (13.0g)
BSC06-01HA-O-PP	6mm	1/8" Male BSPP (G)	10	No	9mm	1.65" (42.0mm)	1.19oz (34.0g)
BSC06-02HA-O-PP		1/4" Male BSPP (G)			10mm	2.00" (51.0mm)	1.90oz (54.0g)
BSC08-01HA-O-PP	8mm	1/8" Male BSPP (G)	10	No	9mm	1.65" (42.0mm)	1.23oz (35.0g)
BSC08-02HA-O-PP		1/4" Male BSPP (G)			10mm	2.00" (51.0mm)	1.94oz (55.0g)
BSC08-03HA-O-PP		3/8" Male BSPP (G)			14mm	2.48" (63.0mm)	3.49oz (99.0g)
BSC10-02HA-O-PP	10mm	1/4" Male BSPP (G)	10	No	10mm	2.00" (51.0mm)	2.18oz (62.0g)
BSC10-03HA-O-PP		3/8" Male BSPP (G)			14mm	2.48" (63.0mm)	3.70oz (105g)

Stainless Steel Series

The Stainless Steel Series features 316SS construction along with Viton® seals for the ultimate in corrosion resistance.

Specifications	
Working Pressure	290 psi
Temperature Range	-20°F to 420°F
Vacuum Rating	29.5 " HG
Metal Body Material	316 Stainless Steel
O-Ring	Viton®
Grip Ring	301 Stainless Steel
Release Ring	316 Stainless Steel
Media	Compressed Air/ Inert Gases

SS 04 - 01 M - PT

Stainless Steel	Tubing Size	Thread Size		Model	Thread Type	
		1032	10-32 Male		(Blank)	NPT
		01	1/8"		PT	BSPT (R)
		02	1/4"		PP	BSPP (G)
		03	3/8"		U	Universal
		04	1/2"			
		M5	M5 x 0.8			

Stainless Steel Series: Straight Fittings

Male Straight

Male Straight Fittings featuring a hex outer shape, allowing for simplified installation. These fittings are composed of 316 Stainless Steel.

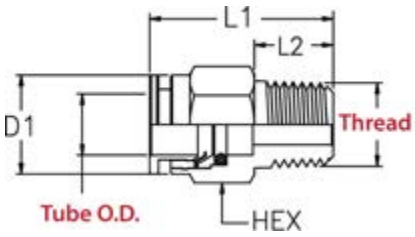

Fractional Tube Sizes

Model	Tube OD	Thread	Package Qty.	Stock	Hex	Length	Weight
SS532-1032M	5/32"	10-32 Male	1	No	7/16"	0.92" (23.3mm)	0.32oz (9.07g)
SS532-01M		1/8" Male NPT		Yes	10mm	0.81" (20.5mm)	
SS532-02M		1/4" Male NPT		No	14mm	0.94" (23.9mm)	
SS532-03M		3/8" Male NPT			11/16"	1.00" (25.4mm)	0.48oz (13.6g)
SS316-01M *	3/16"	1/8" Male NPT	1	No	7/16"	0.85" (21.5mm)	0.48oz (13.6g)
SS316-02M		1/4" Male NPT			9/16"	0.90" (22.8mm)	
SS14-1032M	1/4"	10-32 Male	1	Yes	1/2"	0.97" (24.6mm)	0.32oz (9.07g)
SS14-01UM		1/8" Universal		No	9/16"	0.90" (22.8mm)	0.48oz (13.6g)
SS14-01M		1/8" Male NPT		Yes	12mm	0.81" (20.7mm)	
SS14-02M		1/4" Male NPT		Yes	14mm	0.97" (24.7mm)	0.64oz (18.1g)
SS14-03M		3/8" Male NPT			1/16"	0.96" (24.3mm)	0.96oz (27.2g)
SS516-01M	5/16"	1/8" Male NPT	1	No	14mm	1.08" (27.5mm)	0.64oz (18.1g)
SS516-02M		1/4" Male NPT			14mm	1.00" (25.5mm)	
SS516-03M		3/8" Male NPT			17mm	1.08" (27.5mm)	1.12oz (31.7g)
SS516-04M		1/2" Male NPT			21mm	1.20" (30.5mm)	1.44oz (41.6g)
SS38-01M	3/8"	1/8" Male NPT	1	Yes	17mm	1.15" (29.2mm)	0.80oz (22.6g)
SS38-02M		1/4" Male NPT			17mm	1.25" (31.7mm)	0.96oz (27.2g)
SS38-03M		3/8" Male NPT			19mm	1.25" (31.7mm)	1.12oz (31.7g)
SS38-04M		1/2" Male NPT		No	22mm	1.41" (35.7mm)	1.44oz (41.6g)
SS12-02M	1/2"	1/4" Male NPT	1	Yes	19mm	1.37" (34.7mm)	1.44oz (41.6g)
SS12-03M		3/8" Male NPT			19mm	1.37" (34.7mm)	
SS12-04M		1/2" Male NPT			22mm	1.52" (38.7mm)	1.92oz (54.4g)
SS58-04M	5/8"	1/2" Male NPT	1	No	15/16"	1.50" (38.1mm)	3.04oz (86.1g)

*(Minimum 8 Week Lead Time)

Technifit™ Push-to-Connect Fittings

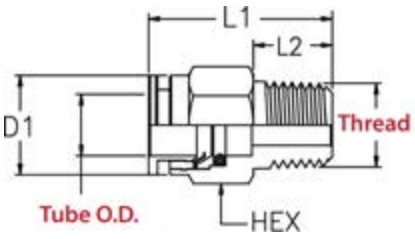

Male Straight (Continued)

Metric Tube Sizes

Model	Tube OD	Thread	Package Qty.	Stock	Hex	Length	Weight
SS04-01M-PT	4mm	1/8" Male BSPT (R)	1	Yes	10mm	0.81" (20.5mm)	0.32oz (9.07g)
SS04-02M-PT		1/4" Male BSPT (R)			14mm	0.94" (23.9mm)	0.64oz (18.1g)
SS04-M5M		M5 x 0.8			10mm	0.78" (19.9mm)	0.32oz (9.07g)
SS04-M6M		M6 x 1.0		No		0.82" (20.9mm)	N/A
SS06-01M-PT	6mm	1/8" Male BSPT (R)	1	Yes	12mm	0.81" (20.7mm)	0.48oz (13.6g)
SS06-02M-PT		1/4" Male BSPT (R)		No	14mm	0.97" (24.7mm)	0.64oz (18.1g)
SS06-03M-PT		3/8" Male BSPT (R)			11/16"	0.96" (24.4mm)	0.96oz (27.2g)
SS06-M5M		M5 x 0.8			12mm	0.81" (20.5mm)	0.48oz (13.6g)
SS06-M6M		M6 x 1.0				0.94" (23.9mm)	N/A
SS08-01M-PT	8mm	1/8" Male BSPT (R)	1	Yes	14mm	1.08" (27.5mm)	0.64oz (18.1g)
SS08-02M-PT		1/4" Male BSPT (R)				1.00" (25.5mm)	
SS08-03M-PT		3/8" Male BSPT (R)			17mm	1.08" (27.5mm)	0.96oz (27.2g)
SS10-01M-PT	10mm	1/8" Male BSPT (R)	1	No	17mm	1.15" (29.2mm)	N/A
SS10-02M-PT		1/4" Male BSPT (R)		Yes		1.25" (31.7mm)	0.96oz (27.2g)
SS10-03M-PT		3/8" Male BSPT (R)					
SS10-04M-PT		1/2" Male BSPT (R)		No	21mm	1.41" (35.7mm)	N/A
SS12-01M-PT	12mm	1/8" Male BSPT (R)	1	No	13/16"	1.27" (32.4mm)	0.96oz(27.2g)
SS12-02 M-PT		1/4" Male BSPT (R)		Yes	19mm	1.37" (34.7mm)	1.28oz (36.2g)
SS12-03 M-PT		3/8" Male BSPT (R)					1.60oz (45.3g)
SS12-04 M-PT		1/2" Male BSPT (R)		No	21mm	1.52" (38.7mm)	1.92oz (54.4g)

*(Minimum 8 Week Lead Time)

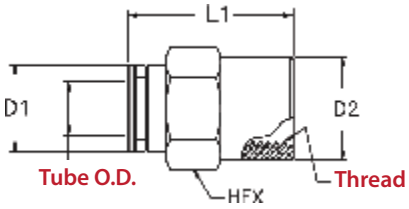

Female Straight

Female Straight Fittings featuring a hex outer shape, allowing for simplified installation. These fittings are composed of 316 Stainless Steel.

Fractional Tube Sizes

Model	Tube OD	Thread	Package Qty.	Stock	Hex	Length	Weight
SS532-01F	5/32"	1/8" Female NPT	1	Yes	14mm	0.96" (24.4mm)	0.48oz (13.6g)
SS532-02F		1/4" Female NPT		No	17mm	1.08" (27.4mm)	
SS316-01F	3/16"	1/8" Female NPT	1	No	9/16"	1.11" (28.1mm)	0.18oz (5.10g)
SS14-01F	1/4"	1/8" Female NPT	1	Yes	14mm	0.97" (24.7mm)	0.48oz (13.6g)
SS14-02F		1/4" Female NPT			17mm	1.09" (27.7mm)	0.96oz (27.2g)
SS516-01F	5/16"	1/8" Female NPT	1	No	14mm	1.06" (26.8mm)	N/A
SS516-02F		1/4" Female NPT			17mm	1.17" (29.8mm)	1.12oz (31.7g)
SS516-03F		3/8" Female NPT			19mm	1.21" (30.8mm)	1.60oz (45.3g)
SS516-04F		1/2" Female NPT			24mm	1.32" (33.5mm)	N/A
SS38-01F	3/8"	1/8" Female NPT	1	No	17mm	1.14" (28.9mm)	N/A
SS38-02F		1/4" Female NPT		Yes	17mm	1.26" (31.9mm)	1.60oz (45.3g)
SS38-03F		3/8" Female NPT			19mm	1.30" (32.9mm)	
SS38-04F		1/2" Female NPT		No	24mm	1.41" (35.9mm)	2.40oz (68.0g)
SS12-02F	1/2"	1/4" Female NPT	1	No	21mm	1.34" (34.1mm)	N/A
SS12-03F		3/8" Female NPT				1.38" (35.1mm)	2.40oz (68.0g)
SS12-04F		1/2" Female NPT			24mm	1.50" (38.1mm)	3.20oz (90.7g)

*(Minimum 8 Week Lead Time)

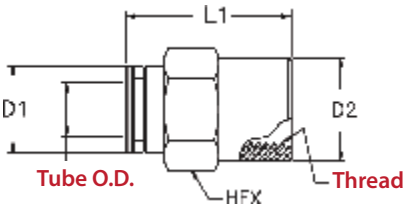

Metric Tube Sizes

Model	Tube OD	Thread	Package Qty.	Stock	Hex	Length	Weight
SS04-M5F	4mm	M5 x 0.8	1	Yes	12mm	0.92" (23.4mm)	0.48oz (13.6g)
SS04-M6F		M6 x 1.0		No	12mm	0.92" (23.4mm)	N/A
SS04-01F-PT		1/8" Female BSPT (R)		Yes	14mm	0.96" (24.4mm)	8oz (13.6g)
SS06-M5F	6mm	M5 x 0.8	1	No	12mm	0.93" (23.7mm)	N/A
SS06-M6F		M6 x 1.0			12mm	0.93" (23.7mm)	
SS06-01F-PT		1/8" Female BSPT (R)			14mm	1.08" (27.4mm)	0.48oz (13.6g)
SS06-02F-PT		1/4" Female BSPT (R)			17mm	1.09" (27.7mm)	0.96oz (27.2g)
SS08-02F-PT	8mm	1/4" Female BSPT (R)	1	Yes	17mm	1.17" (29.8mm)	1.12oz (31.7g)
SS08-03F-PT		3/8" Female BSPT (R)			19mm	1.21" (30.8mm)	1.60oz (45.3g)
SS08-04F-PT		1/2" Female BSPT (R)		No	24mm	1.32" (33.5mm)	N/A
SS10-01F-PT	10mm	1/8" Female BSPT (R)	1	No	17mm	1.14" (28.9mm)	N/A
SS10-02F-PT		1/4" Female BSPT (R)		Yes	17mm	1.26" (31.9mm)	1.60oz (45.3g)
SS10-03F-PT		3/8" Female BSPT (R)			19mm	1.30" (32.9mm)	2.40oz (68.0g)
SS10-04F-PT		1/2" Female BSPT (R)		No	24mm	1.41" (35.9mm)	N/A
SS12-02F-PT	12mm	1/4" Female BSPT (R)	1	No	21mm	1.34" (34.1mm)	N/A
SS12-03F-PT		3/8" Female BSPT (R)			21mm	1.38" (35.1mm)	
SS12-04F-PT		1/2" Female BSPT (R)			24mm	1.50" (38.1mm)	

*(Minimum 8 Week Lead Time)

Stainless Steel Series: Elbow Fittings

Swivel Male Elbow

Swivel Male Elbows feature a single push-to-connect port arranged 90° apart from a male thread. These fittings are composed of 316 stainless steel.

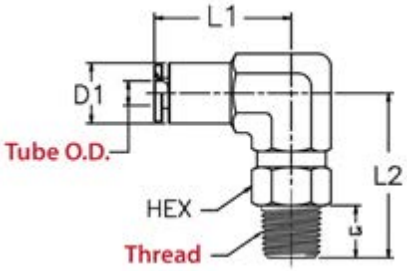

Fractional Tube Sizes

Model	Tube OD	Thread	Package Qty.	Stock	Hex	Length	Weight
SS532-1032ML	5/32"	10-32 Male	1	No	7/16"	0.98" (24.8mm)	0.80oz (22.6g)
SS532-01ML		1/8" Male NPT		Yes	12mm	0.98" (25.0mm)	0.96oz (27.2g)
SS532-02ML		1/4" Male NPT		No	14mm	1.08" (27.5mm)	1.44oz (40.8g)
SS532-03ML		3/8" Male NPT			11/16"	1.20" (30.4mm)	1.92oz (54.3g)
SS316-01ML *	3/16"	1/8" Male NPT	1	No	7/16"	1.05" (27.4mm)	1.92oz (54.3g)
SS14-1032ML	1/4"	10-32 Male	1	No	9/16"	1.18" (29.9mm)	0.80oz (22.6g)
SS14-01UML		1/8" Male Universal			9/16"	1.09" (27.6mm)	1.12oz (32.6g)
SS14-01ML		1/8" Male NPT		Yes	12mm	1.06" (27.0mm)	
SS14-02ML		1/4" Male NPT			14mm	1.04" (26.5mm)	1.60oz (45.3g)
SS14-03ML		3/8" Male NPT		No	1/16"	1.30" (33.0mm)	2.24oz (63.5g)
SS516-01ML	5/16"	1/8" Male NPT	1	No	12mm	1.14" (29.0mm)	1.92oz (54.4g)
SS516-03ML		1/4" Male NPT			14mm	1.24" (31.5mm)	2.24oz (63.5g)
SS516-03ML		3/8" Male NPT			17mm	1.38" (35.0mm)	2.56oz (72.5g)
SS516-04ML		1/2" Male NPT			21mm	1.50" (38.0mm)	2.88oz (81.6g)
SS38-01ML	3/8"	1/8" Male NPT	1	No	17mm	1.44" (36.5mm)	2.40oz (68.0g)
SS38-02ML		1/4" Male NPT		Yes	17mm	1.56" (39.5mm)	2.72oz (77.1g)
SS38-03ML		3/8" Male NPT			19mm	1.56" (39.5mm)	2.88oz (81.6g)
SS38-04ML		1/2" Male NPT		No	22mm	1.67" (42.5mm)	3.20oz (90.7g)
SS12-02ML	1/2"	1/4" Male NPT	1	Yes	17mm	1.65" (42.0mm)	3.68oz (104g)
SS12-03ML		3/8" Male NPT			19mm	1.65" (42.0mm)	3.84oz (108g)
SS12-04ML		1/2" Male NPT		No	22mm	1.77" (45.0mm)	4.48oz (127g)
SS58-04ML	5/8"	1/2" Male NPT	1	No	15/16"	1.73" (43.9mm)	5.60oz (158g)

*(Minimum 8 Week Lead Time)

Metric Tube Sizes

Model	Tube OD	Thread	Package Qty.	Stock	Hex	Length	Weight
SS04-01ML-PT	4mm	1/8" Male BSPT (R)	1	Yes	12mm	0.98" (25.0mm)	0.96oz (27.2g)
SS04-02ML-PT		1/4" Male BSPT (R)			14mm	1.08" (27.5mm)	1.44oz (40.8g)
SS04-M5ML-PT		M5 x 0.8		No	12mm	0.93" (23.5mm)	0.80oz (22.6g)
SS04-M6ML-PT		M6 x 1.0			12mm	0.96" (24.5mm)	N/A
SS06-01ML-PT	6mm	1/8" Male BSPT (R)	1	Yes	12mm	1.06" (27.0mm)	1.44oz (40.8g)
SS06-02ML-PT		1/4" Male BSPT (R)			14mm	1.04" (26.5mm)	
SS06-03ML-PT		3/8" Male BSPT (R)		No	11/16"	1.29" (32.9mm)	1.76oz (49.8g)
SS06-M5ML-PT		M5 x 0.8		Yes	12mm	1.00" (25.5mm)	0.96oz (27.2g)
SS06-M6ML-PT		M6 x 1.0		No	12mm	1.04" (26.5mm)	N/A
SS08-01ML-PT	8mm	1/8" Male BSPT (R)	1	No	12mm	1.14" (29.0mm)	1.44oz (40.8g)
SS08-02ML-PT		1/4" Male BSPT (R)		Yes	14mm	1.24" (31.5mm)	1.76oz (49.8g)
SS08-03ML-PT		3/8" Male BSPT (R)		No	17mm	1.38" (35.0mm)	2.08oz (58.9g)
SS08-04ML-PT		1/2" Male BSPT (R)			21mm	1.50" (38.0mm)	N/A
SS10-01ML-PT	10mm	1/8" Male BSPT (R)	1	No	17mm	1.44" (36.5mm)	1.76oz (49.8g)
SS10-02ML-PT		1/4" Male BSPT (R)			17mm	1.56" (39.5mm)	2.56oz (72.5g)
SS10-03ML-PT		3/8" Male BSPT (R)		Yes	17mm	1.56" (39.5mm)	2.72oz (77.1g)
SS10-04ML-PT		1/2" Male BSPT (R)		No	21mm	1.67" (42.5mm)	
SS12-01ML-PT	12mm	1/8" Male BSPT (R)	1	No	13/16"	1.46" (37.3mm)	3.20oz (90.7g)
SS12-02ML-PT		1/4" Male BSPT (R)		Yes	17mm	1.65" (42.0mm)	3.52oz (99.7g)
SS12-03ML-PT		3/8" Male BSPT (R)				1.65" (42.0mm)	3.84oz (108g)
SS12-04ML-PT		1/2" Male BSPT (R)		No	21mm	1.77" (45.0mm)	4.48oz (127g)

*(Minimum 8 Week Lead Time)

Stainless Steel Series: Tee Fittings

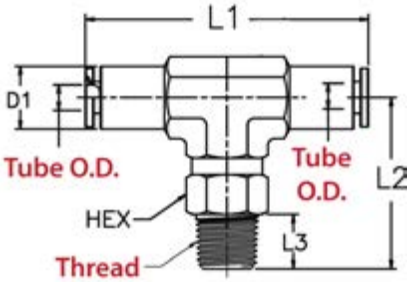

Swivel Male Tee

Swivel Male Tees feature opposing push-to-connect ports arranged 90° from a male thread. These fittings are composed of 316 stainless steel.

Fractional Tube Sizes

Model	Tube OD	Thread	Package Qty.	Stock	Hex	Length	Weight
SS532-1032MT	5/32	10-32 Male	1	No	7/16"	1.34" (34.0mm)	1.28oz (36.2g)
SS532-01MT		1/8" Male NPT		Yes	12mm	1.45" (36.8mm)	
SS532-02MT		1/4" Male NPT		No	14mm	1.45" (36.8mm)	N/A
SS316-01MT	3/16"	1/8" Male NPT	1	No	7/16"	1.35" (34.2mm)	1.28oz (36.2g)
SS14-01UMT	1/4"	1/8" Male Universal	1	No	N/A	62" (41.1mm)	1.60oz (45.3g)
SS14-01MT		1/8" Male NPT		Yes	12mm	1.47" (37.4mm)	
SS14-02MT		1/4" Male NPT			14mm	1.47" (37.4mm)	1.76oz (49.8g)
SS516-01MT	5/16"	1/8" Male NPT	1	No	12mm	1.57" (40.0mm)	2.24oz (63.5g)
SS516-02MT		1/4" Male NPT			14mm	1.57" (40.0mm)	2.56oz (72.5g)
SS516-03MT		3/8" Male NPT			17mm	1.57" (40.0mm)	2.88oz (81.6g)
SS516-04MT		1/2" Male NPT		No	21mm	1.57" (40.0mm)	N/A
SS38-01MT	3/8"	1/8" Male NPT	1	Yes	17mm	1.79" (45.4mm)	2.88oz (81.6g)
SS38-02MT		1/4" Male NPT			17mm	1.79" (45.4mm)	3.20oz (90.7g)
SS38-03MT		3/8" Male NPT			19mm	1.79" (45.4mm)	3.52oz (99.7g)
SS38-04MT		1/2" Male NPT		No	22mm	1.79" (45.4mm)	N/A
SS12-02MT	1/2"	1/4" Male NPT	1	Yes	17mm	2.14" (54.4mm)	4.32oz (122g)
SS12-03MT		3/8" Male NPT			19mm	2.14" (54.4mm)	
SS12-04MT		1/2" Male NPT			22mm	2.14" (54.4mm)	5.12oz (145g)

*(Minimum 8 Week Lead Time)

Metric Tube Sizes

Model	Tube OD	Thread	Package Qty.	Stock	Hex	Length	Weight
SS04-M5MT	4mm	M5 x 0.8	1	No	7/16"	N/A	1.28oz (36.2g)
SS04-M6MT		M6 x 1.0			N/A		N/A
SS04-01MT-PT		1/8" Male BSPT (R)			12mm	1.45" (36.8mm)	1.28oz (36.2g)
SS04-02MT-PT		1/4" Male BSPT (R)			14mm	1.45" (36.8mm)	1.76oz (49.8g)
SS06-01MT-PT	6mm	1/8" Male BSPT (R)	1	No	12mm	1.47" (37.4mm)	1.60oz (45.3g)
SS06-02MT-PT		1/4" Male BSPT (R)			14mm	1.47" (37.4mm)	1.76oz (49.8g)
SS08-01MT-PT	8mm	1/8" Male BSPT (R)	1	No	12mm	1.57" (40.0mm)	1.92oz (54.4g)
SS08-02MT-PT		1/4" Male BSPT (R)			14mm	1.57" (40.0mm)	2.08oz (58.9g)
SS08-03MT-PT		3/8" Male BSPT (R)			17mm	1.57" (40.0mm)	2.56oz (72.5g)
SS08-04MT-PT		1/2" Male BSPT (R)			21mm	1.57" (40.0mm)	N/A
SS10-02MT-PT	10mm	1/4" Male BSPT (R)	1	No	17mm	1.79" (45.4mm)	3.04oz (86.1g)
SS10-03MT-PT		3/8" Male BSPT (R)			17mm	1.79" (45.4mm)	3.36oz (95.2g)
SS10-04MT-PT		1/2" Male BSPT (R)			21mm	1.79" (45.4mm)	N/A
SS12-02MT-PT	12mm	1/4" Male BSPT (R)	1	No	17mm	2.14" (54.4mm)	3.68oz (104g)
SS12-03MT-PT		3/8" Male BSPT (R)			17mm	2.14" (54.4mm)	4.00oz (113g)
SS12-04MT-PT		1/2" Male BSPT (R)			21mm	2.14" (54.4mm)	4.32oz (122g)

*(Minimum 8 Week Lead Time)

Stainless Steel Series: Union Fittings

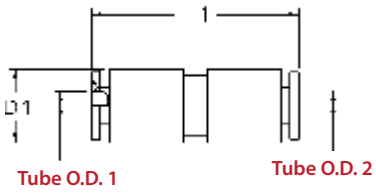

Unions (Reducers Included)

Unions provide opposing push-to-connect ports allowing two sections of tubing to be joined. These fittings are composed of 316 stainless steel.

Fractional Tube Sizes

Model	Tube 1 OD	Tube 2 OD	Package Qty.	Stock	Length	Weight
SS5/32U(4MM)	5/32"	5/32"	1	Yes	1.26" (32.0mm)	0.32oz (9.07g)
SS316U	3/16"	3/16"	1	No	N/A	0.64oz (18.1g)
SS14-532UR	1/4"	5/32"	1	Yes	1.27" (32.3mm)	0.64oz (18.1g)
SS14U		1/4"			1.28" (32.6mm)	
SS516U(8MM)	5/16"	5/16"	1	Yes	1.44" (36.6mm)	0.80oz (22.6g)
SS516-14UR		1/4"		No	1.36" (34.6mm)	N/A
SS38-14UR	3/8"	5/16"	1	Yes	1.36" (34.5mm)	0.80oz (22.6g)
SS38-516UR		3/8"		No	1.51" (38.4mm)	1.44oz (27.2g)
SS38U		3/8"		Yes	1.59" (40.3mm)	
SS12-38UR	1/2"	1/2"	1	Yes	1.67" (42.5mm)	1.44oz (27.2g)
SS12U					1.76" (44.7mm)	1.60oz (45.3g)

*(Minimum 8 Week Lead Time)

Metric Tube Sizes

Model	Tube 1 OD	Tube 2 OD	Package Qty.	Stock	Length	Weight
SS532U(4MM)	4mm	4mm	1	Yes	1.26" (32.0mm)	0.48oz (13.6g)
SS06-04UR	6mm	4mm	1	Yes	1.27" (32.3mm)	0.64oz (18.1g)
SS06U		6mm			1.28" (32.6mm)	
SS08-06UR	8mm	6mm	1	No	1.36" (34.6mm)	0.96oz (27.2g)
SS516U(8MM)		8mm		Yes		1.44" (36.6mm)
SS10-06UR	10mm	6mm	1	No	1.51" (38.4mm)	1.28oz (36.2g)
SS10-08UR		8mm			1.51" (38.4mm)	0.96oz (27.2g)
SS10U		10mm		Yes	1.59" (40.3mm)	
SS12-10UR	12mm	10mm	1	No	1.67" (42.5mm)	1.60oz (45.3g)
SS12MU		12mm		Yes	1.76" 44.7(mm)	

*(Minimum 8 Week Lead Time)

Union Elbows

Unions provide two push-to-connect ports arranged 90° apart allowing two sections of tubing to be joined. These fittings are composed of 316 stainless steel.

Fractional Tube Sizes

Model	Tube 1 OD	Tube 2 OD	Package Qty.	Stock	Length	Weight
SS532UL(4MM)	5/32"	5/32"	1	Yes	0.72" (18.4mm)	0.32oz (9.07g)
SS316UL*	3/16"	3/16"	1	No	1.15" (29.2mm)	0.64oz (18.1g)
SS14UL	1/4"	1/4"	1	Yes	0.74" (18.7mm)	0.64oz (18.1g)
SS516UL(8MM)	5/16"	5/16"	1	Yes	0.79" (20.0mm)	0.64oz (18.1g)
SS38UL	3/8"	3/8"	1	Yes	0.97" (24.7mm)	0.80oz (22.6g)
SS12UL	1/2"	1/2"	1	Yes	1.07" (27.2mm)	0.80oz (22.6g)

*(Minimum 8 Week Lead Time)

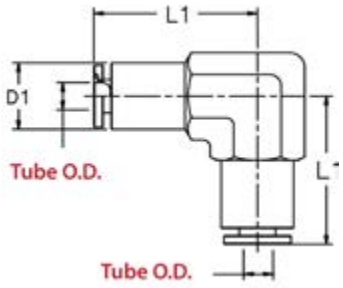

Metric Tube Sizes

Model	Tube 1 OD	Tube 2 OD	Package Qty.	Stock	Length	Weight
SS532UL(4MM)	4mm	4mm	1	Yes	0.72" (18.4mm)	0.80oz (22.6g)
SS06UL	6mm	6mm	1	Yes	0.74" (18.7mm)	0.96oz (27.2g)
SS516UL(8MM)	8mm	8mm	1	Yes	0.79" (20.0mm)	1.28oz (36.2g)
SS10UL	10mm	10mm	1	Yes	0.97" (24.7mm)	2.24oz (63.5g)
SS12MUL	12mm	12mm	1	Yes	1.07" (27.2mm)	2.88oz (81.6g)

*(Minimum 8 Week Lead Time)

Union Tees

Union Tees provide two opposing push-to-connect ports with a third port arranged 90° apart, allowing three sections of tubing to be joined. These fittings are composed of 316 stainless steel.

Fractional Tube Sizes

Model	Tube 1 OD	Tube 2 OD	Package Qty.	Stock	Length	Weight
SS532UT(4MM)	5/32"	5/32"	1	Yes	1.45" (36.8mm)	0.96oz (27.2g)
SS316UT*	3/16"	3/16"	1	No	N/A	1.28oz (36.2g)
SS14UT	1/4"	1/4"	1	Yes	0.74" (18.7mm)	1.28oz (36.2g)
SS516UT(8MM)	5/16"	5/16"	1	Yes	0.79" (20.0mm)	1.44oz (40.8g)
SS38UT	3/8"	3/8"	1	Yes	0.97" (24.7mm)	2.72oz (7.1g)
SS12UT	1/2"	1/2"	1	Yes	1.07" 27.2mm)	3.36oz (95.2g)

*(Minimum 8 Week Lead Time)

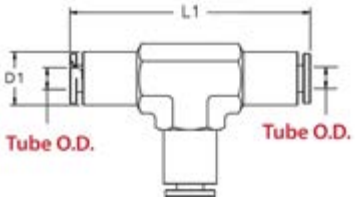

Metric Tube Sizes

Model	Tube 1 OD	Tube 2 OD	Package Qty.	Stock	Length	Weight
SS532UT(4MM)	4mm	4mm	1	Yes	1.45" (36.8mm)	0.96oz (27.2g)
SS06UT	6mm	6mm	1	Yes	0.74" (18.7mm)	1.44oz (40.8g)
SS516UT(8MM)	8mm	8mm	1	Yes	0.79" (20.0mm)	1.44oz (40.8g)
SS10UT	10mm	10mm	1	Yes	0.97" (24.7mm)	2.08oz (58.9g)
SS12MUT	12mm	12mm	1	Yes	1.07" (27.2mm)	2.88oz (81.6g)

*(Minimum 8 Week Lead Time)

Stainless Steel Series: Bulkhead Fittings

Bulkhead Union

Bulkhead Unions provide two opposing push-to-connect ports with threaded nuts allowing for installation through a panel or partition. These fittings are composed of 316 stainless steel.

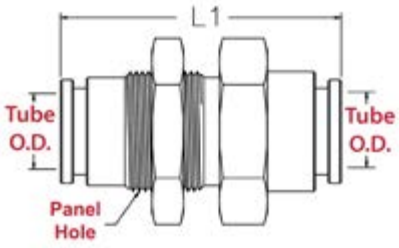

Fractional Tube Sizes

Model	Tube 1 OD	Tube 2 OD	Package Qty.	Stock	Hex	Panel Hole	Length	Weight
SS532BU(4MM)	5/32"	5/32"	1	Yes	14mm	0.47"(12.0mm)	1.26" (32.0mm)	0.80" (22.7g)
SS316BU	3/16"	3/16"	1	Yes	9/16"	0.41" (10.4mm)	1.28" (32.5mm)	1.11" (31.7g)
SS14BU	1/4"	1/4"	1	Yes	17mm	0.66" (17.0mm)	1.28" (32.6mm)	1.43" (40.8g)
SS516BU(8MM)	5/16"	5/16"	1	Yes	19mm	0.62" (16.0mm)	1.44" (36.6mm)	2.07" (58.9g)
SS38BU	3/8"	3/8"	1	Yes	24mm	0.78" (20.0mm)	1.59" (40.3mm)	2.39" (68.0g)
SS12BU	1/2"	1/2"	1	Yes	26mm	0.86" (22.0mm)	1.76" (44.7mm)	3.51" (99.7g)

*(Minimum 8 Week Lead Time)

Metric Tube Sizes

Model	Tube 1 OD	Tube 2 OD	Package Qty.	Stock	Hex	Panel Hole	Length	Weight
SS532BU(4MM)	4mm	4mm	1	Yes	Yes	0.47"(12.0mm)	1.26" (32.0mm)	0.80" (22.7g)
SS06BU	6mm	6mm	1	Yes	Yes	0.66" (17.0mm)	1.28" (32.6mm)	1.43" (40.8g)
SS516BU(8MM)	8mm	8mm	1	Yes	Yes	0.62" (16.0mm)	1.44" (36.6mm)	2.07" (58.9g)
SS10BU	10mm	10mm	1	Yes	Yes	0.78" (20.0mm)	1.59" (40.3mm)	2.71" (77.1g)
SS12MBU	12mm	12mm	1	Yes	Yes	0.86" (22.0mm)	1.76" (44.7mm)	3.35" (95.2g)

*(Minimum 8 Week Lead Time)

Fluidfit™ Push-to-Connect Fittings

Fluidfit™ Push-to-Connect Fittings

Fluidfit

Fluidfit Products are intended for contact with water or food & beverage equipment.

HPC 1/4 - N01

Model

Tubing Size	
5/32	5/32" (0.1562")
3/16	3/16" (0.1875")
1/4	1/4" (0.2500")
5/16	5/16" (0.3125")
3/8	3/8" (0.3750")
1/2	1/2" (0.5000")
04	4mm
06	6mm
08	8mm
10	10mm
12	12mm

Thread	
N01	1/8" NPT
N02	1/4" NPT
N03	3/8" NPT
N04	1/2" NPT
R01	1/8" BSPT (R)
R02	1/4" BSPT (R)
R03	3/8" BSPT (R)
R04	1/2" BSPT (R)

Specifications	
Working Pressure @ 77°F	232 psi
Working Pressure @ 158°F	145 psi
Temperature Range	32°F to 158°F
Resin Body Material	POM
O-Ring	EPDM Rubber
Release Ring	POM & STS301
Media	Compressed Air/ Inert Gases/ Water/ Fluids
Max Install Torque 1/8 NPT	1.1 lb/ft
Max Install Torque 1/4-1/2 NPT	2.2 lb/ft

Certifications
NSF 51® Certified
NSF 61® Certified

Threaded Straight Fittings

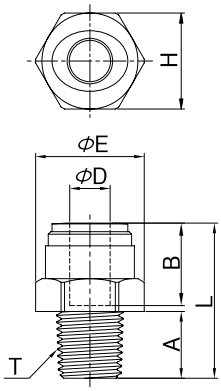

Hex Male Straight – HPC

Hex Male Straight Fittings feature a hex outer shape, allowing for simplified installation.

Fractional Tube Sizes

Model	Tube OD	Thread	Package Qty.	Stock	Hex	Length	Weight	Color
HPC5/32-N01	5/32"	1/8" Male NPT	10	Yes	5/8"	0.87" (22.2mm)	0.11oz (3.20g)	Natural
HPC5/32-N02		1/4" Male NPT				0.92" (25.3mm)	0.15oz (4.30g)	
HPC3/16-N01	3/16"	1/8" Male NPT	10	Yes	5/8"	0.88" (22.4mm)	0.10oz (3.10g)	Natural
HPC3/16-N02		1/4" Male NPT				1.00" (25.5mm)	0.14oz (4.20g)	
HPC1/4-N01	1/4"	1/8" Male NPT	10	Yes	5/8"	1.06" (27.0mm)	0.13oz (3.90g)	Natural
HPC1/4-N02		1/4" Male NPT				1.06" (27.0mm)	0.15oz (4.30g)	
HPC1/4-N03		3/8" Male NPT	5		3/4"	1.02" (26.1mm)	0.21oz (6.10g)	
HPC1/4-N04		1/2" Male NPT		No	7/8"	1.18" (30.1mm)	0.33oz (9.60g)	
HPC1/4-R01		1/8" Male BSPT	10		17mm	1.02" (26.2mm)	0.14oz (4.00g)	
HPC1/4-R02		1/4" Male BSPT			17mm	1.05" (26.8mm)	0.11oz (3.20g)	
HPC1/4-R03		3/8" Male BSPT	5		19mm	1.05" (26.6mm)	0.20oz (5.80g)	
HPC1/4-R04		1/2" Male BSPT			21mm	1.13" (28.9mm)	0.23oz (6.80g)	
HPC5/16-N01	5/16"	1/8" Male NPT	10	Yes	3/4"	1.11" (28.4mm)	0.19oz (5.60g)	Natural
HPC5/16-N02		1/4" Male NPT	5			1.09" (27.9mm)	0.18oz (5.20g)	
HPC5/16-N03		3/8" Male NPT				1.04" (26.5mm)	0.21oz (6.00g)	
HPC5/16-N04		1/2" Male NPT			7/8"	1.31" (33.5mm)	0.40oz (11.5g)	
HPC3/8-N01	3/8"	1/8" Male NPT	5	Yes	13/16"	1.19" (30.4mm)	0.23oz (6.70g)	Natural
HPC3/8-N02		1/4" Male NPT				1.35" (34.3mm)	0.27oz (7.90g)	
HPC3/8-N03		3/8" Male NPT				1.17" (29.9mm)	0.26oz (7.50g)	
HPC3/8-N04		1/2" Male NPT			7/8"	1.33" (33.9mm)	0.38oz (11.0g)	
HPC1/2-N03	1/2"	3/8" Male NPT	5	Yes	31/32"	1.51" (38.4mm)	0.41oz (11.7g)	Natural
HPC1/2-N04		1/2" Male NPT				1.49" (37.9mm)	0.44oz (12.7g)	

Hex Male Straight – HPC (Continued)

Metric Tube Sizes

Model	Tube OD	Thread	Package Qty.	Stock	Hex	Length	Weight	Color
HPC04R01	4mm	1/8" Male BSPT (R)	10	No	17mm	1.02" (26.0mm)	0.14oz (4.10g)	Black
HPC04G01		1/8" Male BSPP (G)			15mm	0.86" (21.9mm)	0.11oz (3.30g)	
HPC04G02		1/4" Male BSPP (G)			18mm	0.94" (23.9mm)	0.17oz (4.90g)	
HPC06R01	6mm	1/8" Male BSPT (R)	10	No	17mm	1.03" (26.2mm)	0.13oz (3.90g)	Black
HPC06R02		1/4" Male BSPT (R)				1.05" (26.7mm)	0.14oz (4.20g)	
HPC06R03		3/8" Male BSPT (R)	5		19mm	1.04" (26.6mm)	0.20oz (5.90g)	
HPC06G01		1/8" Male BSPP (G)	10		15mm	0.94" (24.1mm)	0.11oz (3.30g)	
HPC06G02		1/4" Male BSPP (G)			18mm	0.94" (24.1mm)	0.16oz (4.80g)	
HPC08R01	8mm	1/8" Male BSPT (R)	10	No	19mm	1.10" (28.1mm)	0.18oz (5.20g)	Black
HPC08R02		1/4" Male BSPT (R)	5			1.20" (30.6mm)	0.20oz (5.80g)	
HPC08R03		3/8" Male BSPT (R)				1.06" (27.0mm)	0.20oz (5.70g)	
HPC08G01		1/8" Male BSPP (G)	10		17mm	1.06" (27.0mm)	0.18oz (5.20g)	
HPC08G02		1/4" Male BSPP (G)	5		18mm	1.12" (28.5mm)	0.21oz (6.10g)	
HPC08G03		3/8" Male BSPP (G)			21mm	1.04" (26.5mm)	0.24oz (7.00g)	
HPC08G04		1/2" Male BSPP (G)			26mm	1.16" (29.5mm)	0.41oz (11.9g)	
HPC10R03	10mm	3/8" Male BSPT (R)	5	No	21mm	1.13" (28.8mm)	0.23oz (6.70g)	Black
HPC10R04		1/2" Male BSPT (R)			22mm	1.26" (32.1mm)	0.33oz (9.60g)	
HPC10G02		1/4" Male BSPP (G)			19mm	1.21" (30.8mm)	0.25oz (7.20g)	
HPC10G03		3/8" Male BSPP (G)			21mm	1.03" (26.3mm)	0.24oz (7.00g)	
HPC10G04		1/2" Male BSPP (G)	3		26mm	1.17" (29.8mm)	0.39oz (11.3g)	
HPC12R03	12mm	3/8" Male BSPT (R)	5	No	24mm	1.26" (32.2mm)	0.31oz (8.90g)	Black
HPC12R04		1/2" Male BSPT (R)				1.35" (34.3mm)	0.38oz (11.0g)	
HPC12G03		3/8" Male BSPP (G)	3			1.34" (34.2mm)	0.40oz (11.6g)	
HPC12G04		1/2" Male BSPP (G)			26mm	1.28" (32.7mm)	0.43oz (12.4g)	

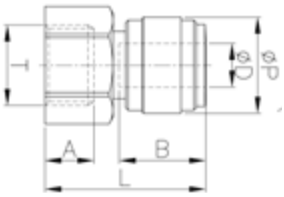

Hex Female Straight – HCF

Hex Female Straight Fittings feature a hex outer shape, allowing for simplified installation.

Fractional Tube Sizes

Model	Tube OD	Thread	Package Qty.	Stock	Hex	Length	Weight	Color
HCF 1/4-N01	1/4"	1/8" Female NPT	5	No	17mm	1.21" (30.9mm)	0.21oz (6.1g)	Natural
HCF 1/4-N02		1/4" Female NPT			19mm		0.22oz (6.5g)	
HCF 3/8-N02	3/8"	1/4" Female NPT	5	No	19mm	1.34" (34.2mm)	0.29oz (8.5g)	Natural

Metric Tube Sizes

Model	Tube OD	Thread	Package Qty.	Stock	Hex	Length	Weight	Color
HCF04G01	4mm	1/8" Female BSPP (G)	5	No	17mm	1.05" (26.9mm)	0.23oz (6.60g)	Black
HCF06G01	6mm	1/8" Female BSPP (G)	5	No	17mm	1.06" (27.1mm)	0.21oz (6.10g)	Black
HCF06G02		1/4" Female BSPP (G)			19mm	1.14" (29.1mm)	0.24oz (7.00g)	
HCF06G03		3/8" Female BSPP (G)			24mm	1.20" (30.6mm)	0.34oz (9.90g)	
HCF08G01	8mm	1/8" Female BSPP (G)	5	No	17mm	1.08" (27.5mm)	0.21oz (6.00g)	Black
HCF08G02		1/4" Female BSPP (G)			19mm	1.16" (29.5mm)	0.23oz (6.70g)	
HCF08G03		3/8" Female BSPP (G)			24mm	1.22" (31.0mm)	0.34oz (9.70g)	
HCF08G04		1/2" Female BSPP (G)	3			1.49" (38.0mm)	0.48oz (13.8g)	
HCF08G06		3/4" Female BSPP (G)	2		36.7mm	1.44" (36.6mm)	1.38oz (39.2g)	
HCF10G02	10mm	1/4" Female BSPP (G)	5	No	19mm	1.35" (34.5mm)	0.38oz (10.8g)	Black
HCF10G03		3/8" Female BSPP (G)	3		24mm	1.45" (37.0mm)	0.48oz (13.7g)	
HCF10G04		1/2" Female BSPP (G)			27mm	1.50" (38.3mm)	0.46oz (13.3g)	
HCF10G06		3/4" Female BSPP (G)	2		36.7mm	1.45" (36.9mm)	1.36oz (38.6g)	
HCF12G02	12mm	1/4" Female BSPP (G)	5	No	19mm	1.38" (35.2mm)	0.36oz (10.3g)	Black
HCF12G03		3/8" Female BSPP (G)	3		24mm	1.48" (37.7mm)	0.45oz (13.0g)	
HCF12G04		1/2" Female BSPP (G)			27mm	1.64" (41.7mm)	0.54oz (15.4g)	

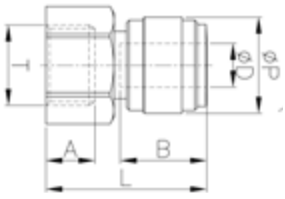

Hex Female Straight – HCF Faucet & Tap Adapters

Fractional Tube Sizes

Model	Tube OD	Thread	Package Qty.	Stock	Hex	Length	Weight	Color
HCF5/16-UNF7/16	5/16"	7/16-20 Female UNF	5	No	17mm	1.20" (30.5mm)	0.22oz (6.50g)	Natural
HCF5/16-UNS7/16		7/16-24 Female UNS				1.08" (27.5mm)	0.21oz (6.10g)	
HCF3/8-UNF7/16	3/8"	7/16-20 Female UNF	5	No	17mm	1.30" (33.2mm)	0.26oz (7.50g)	Natural
HCF38-UN1/2		1/2-16 Female UN			19mm	1.44" (36.7mm)	0.31oz (8.90g)	

Metric Tube Sizes

Model	Tube OD	Thread	Package Qty.	Stock	Hex	Length	Weight	Color
HCF06-UNF7/16	6mm	7/16-20 Female UNF	5	No	17mm	1.18" (30.1mm)	0.22oz (6.50g)	Black
HCF06-UNS7/16		7/16-24 Female UNS			17mm	1.06" (27.1mm)	0.21oz (6.10g)	
HCF06-NH06		3/4 Female National Hose			1 7/16"	1.34" (34.2mm)	1.23oz (34.9g)	
HCF08-UNF7/16	8mm	7/16-20 Female UNF	5	No	17mm	1.20" (30.5mm)	0.22oz (6.50g)	Black
HCF08-UNS7/16		7/16-24 Female UNS			17mm	1.08" (27.5mm)	0.21oz (6.10g)	
HCF08-NH06		3/4 Female National Hose			1 7/16"	1.44" (36.6mm)	1.28oz (36.5g)	
HCF10-UNF7/16	10mm	7/16-20 Female UNF	5	No	17mm	1.30" (33.1mm)	0.26oz (7.50g)	Black
HCF10-NH06		3/4 Female National Hose			1 7/16"	1.45" (36.9mm)	1.34oz (38.1g)	

Threaded Elbow Fittings

Rigid Male Elbow – HPL

Rigid Male Elbows feature a male thread arranged 90° from a push-to-connect port.

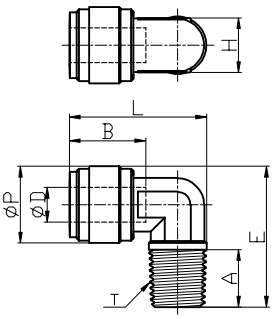

Fractional Tube Sizes

Model	Tube OD	Thread	Package Qty.	Stock	Hex	Length	Weight	Color
HPL5/32-N01	5/32"	1/8" Male NPT	10	Yes	7/16"	1.00" (25.4mm)	0.17oz (4.90g)	Natural
HPL3/16-N01	3/16'	1/8" Male NPT	10	Yes	7/16"	1.00" (25.6mm)	0.16oz (4.70g)	Natural
HPL1/4-N01	1/4"	1/8" Male NPT	10	Yes	7/16"	1.00" (25.6mm)	0.14oz (4.20g)	Natural
HPL1/4-N02		1/4" Male NPT	5			1.06" (27.0mm)	0.20oz (5.70g)	
HPL1/4-N03		3/8" Male NPT				1.13" (28.9mm)	0.25oz (7.10g)	
HPL5/16-N02	5/16"	1/4" Male NPT	5	Yes	9/16"	1.23" (31.4mm)	0.31oz (9.00g)	Natural
HPL5/16-N03		3/8" Male NPT				1.31" (33.5mm)	0.36oz (10.3g)	
HPL3/8-N02	3/8"	1/4" Male NPT	5	Yes	9/16"	1.25" (31.8mm)	0.30oz (8.60g)	Natural
HPL3/8-N03		3/8" Male NPT				1.33" (33.9mm)	0.34oz (9.90g)	
HPL1/2-N03	1/2"	3/8" Male NPT	3	Yes	11/16"	1.56" (39.7mm)	0.46oz (13.3g)	Natural
HPL1/2-N04		1/2" Male NPT				1.63" (41.5mm)	0.57oz (16.2g)	

Metric Tube Sizes

Model	Tube OD	Thread	Package Qty.	Stock	Hex	Length	Weight	Color
	4mm	1/8" Male BSPT (R)	10	No	10mm	0.99" (25.2mm)	0.14oz (4.20g)	Black
	6mm	1/8" Male BSPT (R)	10	No	10mm	1.00" (25.4mm)	0.14oz (4.10g)	Black
		1/4" Male BSPT (R)	5			1.06" (27.0mm)	0.17oz (5.10g)	
	8mm	1/4" Male BSPT (R)	5	No	13mm	1.24" (31.5mm)	0.24oz (7.00g)	Black
	10mm	3/8" Male BSPT (R)	5	No	14mm	1.33" (33.9mm)	0.32oz (9.20g)	Black
	12mm	1/2" Male BSPT (R)	3	No	17mm	1.60" (40.7mm)	0.5oz (15.6g)	Black

Swivel Male Elbow – HRPL

Swivel Male Elbows feature a swivel male thread arranged 90° from a push-to-connect port.

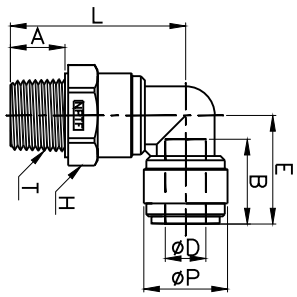

Fractional Tube Sizes

Model	Tube OD	Thread	Package Qty.	Stock	Hex	Length	Weight	Color
HRPL5/32-N01	5/32"	1/8" Male NPT	5	No	5/8"	1.16" (29.7mm)	N/A	Natural
HRPL5/32-N02		1/4" Male NPT				1.33" (33.8mm)		
HRPL1/4-N01	1/4"	1/8" Male NPT	5	No	11/16"	1.29" (32.8mm)	0.28oz (8.20g)	Natural
HRPL1/4-N02		1/4" Male NPT				1.45" (36.9mm)		
HRPL5/16-N01	5/16"	1/8" Male NPT	3	No	3/4"	1.33" (33.8mm)	N/A	Natural
HRPL5/16-N02		1/4" Male NPT				1.49" (37.9mm)		
HRPL5/16-N03		3/8" Male NPT				1.51" (38.5mm)		
HRPL3/8-N02	3/8"	1/4" Male NPT	3	No	27/32"	1.64" (41.9mm)	0.54oz (15.5g)	Natural
HRPL3/8-N03		3/8" Male NPT				1.64" (41.9mm)		
HRPL1/2-N03	1/2"	3/8" Male NPT	2	No	15/16"	1.90" (48.5mm)	N/A	Natural
HRPL1/2-N04		1/2" Male NPT				2.02" (51.5mm)		

Metric Tube Sizes

Model	Tube OD	Thread	Package Qty.	Stock	Hex	Length	Weight	Color
HRPL04R01	4mm	1/8" Male BSPT	5	No	15mm	1.16" (29.7mm)	N/A	Natural
HRPL04R02		1/4" Male BSPT			17mm	1.32" (33.7mm)		
HRPL06R01	6mm	1/8" Male BSPT	5	No	17mm	1.24" (31.7mm)	0.25oz (7.20g)	Natural
HRPL06R02		1/4" Male BSPT				1.40" (35.7mm)	0.28oz (8.00g)	
HRPL08R01	8mm	1/8" Male BSPT	3	No	19mm	1.31" (33.4mm)	0.34oz (9.90g)	Natural
HRPL08R02		1/4" Male BSPT				1.47" (37.4mm)	0.37oz (10.7g)	
HRPL08R03		3/8" Male BSPT				1.48" (37.8mm)	0.50oz (11.4g)	
HRPL10R02	10mm	1/4" Male BSPT	3	No	21mm	1.62" (41.4mm)	N/A	Natural
HRPL10R03		3/8" Male BSPT				1.64" (41.8mm)	0.54oz (15.4g)	
HRPL10R04		1/2" Male BSPT	2		24mm	1.76" (44.8mm)	N/A	
HRPL12R03	12mm	3/8" Male BSPT	2	No	24mm	1.89" (48.2mm)	N/A	Natural
HRPL12R04		1/2" Male BSPT				2.01" (51.2mm)		

Tee Fittings

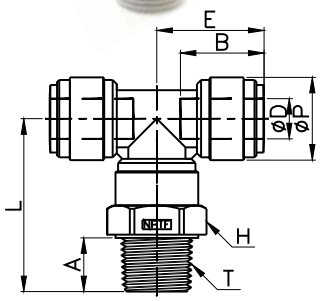

Male Swivel Branch Tee - HRPT

Male Swivel Branch Tees feature opposing push-to-connect ports arranged 90° from a single male swivel thread.

Fractional Tube Sizes

Model	Tube OD	Thread	Package Qty.	Stock	Hex	Length	Weight	Color
HRPT5/32-N01	5/32"	1/8" Male NPT	5	No	5/8"	1.16" (29.7mm)	N/A	Natural
HRPT5/32-N02		1/4" Male NPT				1.33" (33.8mm)		
HRPT1/4-N01	1/4"	1/8" Male NPT	5	No	11/16"	1.29" (32.8mm)	0.35oz (10.2g)	Natural
HRPT1/4-N02		1/4" Male NPT	3			1.45" (36.9mm)	0.39oz (11.3g)	
HRPT5/16-N01	5/16"	1/8" Male NPT	3	No	3/4"	1.33" (33.8mm)	N/A	Natural
HRPT5/16-N02		1/4" Male NPT				1.49" (37.9mm)		
HRPT5/16-N03		3/8" Male NPT				1.51" (38.5mm)		
HRPT3/8-N02	3/8"	1/4" Male NPT	3	No	27/32"	1.64" (41.9mm)	0.71oz (20.2g)	Natural
HRPT3/8-N03		3/8" Male NPT	2			1.64" (41.8mm)	0.73oz (20.8g)	
HRPT1/2-N03	1/2"	3/8" Male NPT	1	No	15/16"	1.90" (48.5mm)	N/A	Natural
HRPT1/2-N04		1/2" Male NPT				2.02" (51.5mm)		

Metric Tube Sizes

Model	Tube OD	Thread	Package Qty.	Stock	Hex	Length	Weight	Color
HRPT04R01	4mm	1/8" Male BSPT	5	No	15mm	1.16" (29.7mm)	N/A	Black
HRPT04R02		1/4" Male BSPT			17mm	1.32" (33.7mm)		
HRPT06R01	6mm	1/8" Male BSPT	5	No	17mm	1.24" (31.7mm)	0.32oz (9.34g)	Black
HRPT06R02		1/4" Male BSPT	3			1.40" (35.7mm)	0.36oz (10.3g)	
HRPT08R01	8mm	1/8" Male BSPT	3	No	19mm	1.31" (33.4mm)	0.46oz (13.1g)	Black
HRPT08R02		1/4" Male BSPT				1.47" (37.4mm)	0.49oz (14.0g)	
HRPT08R03		3/8" Male BSPT				1.48" (37.8mm)	0.51oz (14.6g)	
HRPT10R02	10mm	1/4" Male BSPT	3	No	21mm	1.62" (41.4mm)	N/A	Black
HRPT10R03		3/8" Male BSPT				1.64" (41.8mm)	0.68oz (19.4g)	
HRPT10R04		1/2" Male BSPT			24mm	1.76" (44.8mm)	N/A	
HRPT12R03	12mm	3/8" Male BSPT	1	No	24mm	1.68" (42.8mm)	N/A	Black
HRPT12R04		1/2" Male BSPT				2.01" (51.2mm)		

Male Swivel Run Tee - HRST

Male Swivel Run Tees feature a push-to-connect port opposed to a male swivel, both arranged 90° from a push-to-connect port.

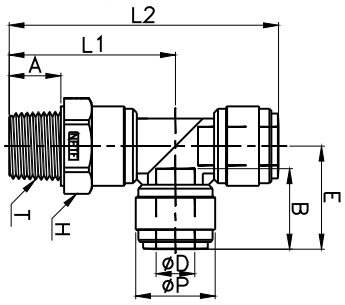

Fractional Tube Sizes

Model	Tube OD	Thread	Package Qty.	Stock	Hex	Length	Weight	Color
HRST5/32-N01	5/32"	1/8" Male NPT	5	No	5/8"	1.16" (29.7mm)	N/A	Natural
HRST5/32-N02		1/4" Male NPT				1.33" (33.8mm)		
HRST1/4-N01	1/4"	1/8" Male NPT	5	No	11/16"	1.29" (32.8mm)	0.35oz (10.2g)	Natural
HRST1/4-N02		1/4" Male NPT	3			1.45" (36.9mm)	0.39oz (11.3g)	
HRST5/16-N01	5/16"	1/8" Male NPT	3	No	3/4"	1.33" (33.8mm)	N/A	Natural
HRST5/16-N02		1/4" Male NPT				1.49" (37.9mm)		
HRST5/16-N03		3/8" Male NPT				1.51" (38.5mm)		
HRST3/8-N02	3/8"	1/4" Male NPT	3	No	27/32"	1.64" (41.9mm)	0.71oz (20.2g)	Natural
HRST3/8-N03		3/8" Male NPT	2			1.64" (41.8mm)		
HRST1/2-N03	1/2"	3/8" Male NPT	1	No	15/16"	1.90" (48.5mm)	N/A	Natural
HRST1/2-N04		1/2" Male NPT				2.02" (51.5mm)		

Metric Tube Sizes

Model	Tube OD	Thread	Package Qty.	Stock	Hex	Length	Weight	Color
HRST04R01	4mm	1/8" Male BSPT	5	No	15mm	1.16" (29.7mm)	N/A	Black
HRST04R02		1/4" Male BSPT			17mm	1.32" (33.7mm)	N/A	
HRST06R01	6mm	1/8" Male BSPT	5	No	17mm	1.24" (31.7mm)	0.32oz (9.34g)	Black
HRST06R02		1/4" Male BSPT	3			1.40" (35.7mm)	0.36oz (10.3g)	
HRST08R01	8mm	1/8" Male BSPT	3	No	19mm	1.31" (33.4mm)	0.46oz (13.1g)	Black
HRST08R02		1/4" Male BSPT				1.47" (37.4mm)	0.49oz (14.0g)	
HRST08R03		3/8" Male BSPT				1.48" (37.8mm)	0.51oz (14.6g)	
HRST10R02	10mm	1/4" Male BSPT	3	No	21mm	1.62" (41.4mm)	N/A	Black
HRST10R03		3/8" Male BSPT				1.64" (41.8mm)	N/A	
HRST10R04		1/2" Male BSPT			24mm	1.76" (44.8mm)	0.68oz (19.4g)	
HRST12R03	12mm	3/8" Male BSPT	1	No	24mm	1.89" (48.2mm)	N/A	Black
HRST12R04		1/2" Male BSPT				2.01" (51.2mm)	N/A	

Y Fittings

Male Swivel Y - HRWT

Male Y Fittings feature parallel push-to-connect ports opposed to a single male swivel thread.

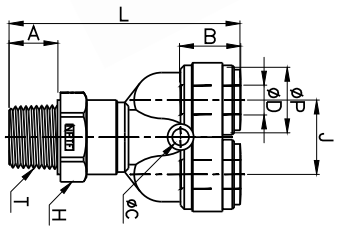

Fractional Tube Sizes

Model	Tube OD	Thread	Package Qty.	Stock	Hex	Length	Weight	Color
HRWT5/32-N01	5/32"	1/8" Male NPT	5	No	5/8"	1.44" (36.8mm)	N/A	Natural
HRWT5/32-N02		1/4" Male NPT				1.95" (49.6mm)		
HRWT1/4-N01	1/4"	1/8" Male NPT	5	No	11/16"	1.99" (50.6mm)	0.38oz (11.0g)	Natural
HRWT1/4-N02		1/4" Male NPT	3			2.15" (54.7mm)	0.43oz (12.2g)	
HRWT5/16-N01	5/16"	1/8" Male NPT	3	No	3/4"	2.08" (52.9mm)	N/A	Natural
HRWT5/16-N02		1/4" Male NPT				2.24" (57.0mm)		
HRWT5/16-N03		3/8" Male NPT				2.26" (57.6mm)		
HRWT53/8-N02	3/8"	1/4" Male NPT	3	No	27/32"	2.45" (62.4mm)	0.74oz (21.2g)	Natural
HRWT3/8-N03		3/8" Male NPT	2			2.45" (62.3mm)	0.76oz (21.7g)	
HRWT1/2-N03	1/2"	3/8" Male NPT	1	No	15/16"	0.93" (23.8mm)	N/A	Natural
HRWT1/2-N04		1/2" Male NPT				0.93" (23.8mm)		

Metric Tube Sizes

Model	Tube OD	Thread	Package Qty.	Stock	Hex	Length	Weight	Color
HRWT04R01	4mm	1/8" Male BSPT	5	No	15mm	1.16" (29.7mm)	N/A	Black
HRWT04R02		1/4" Male BSPT			17mm	1.32" (33.7mm)		
HRWT06R01	6mm	1/8" Male BSPT	5	No	17mm	1.24" (31.7mm)	0.32oz (9.34g)	Black
HRWT06R02		1/4" Male BSPT	3			1.40" (35.7mm)	0.36oz (10.3g)	
HRWT08R01	8mm	1/8" Male BSPT	3	No	19mm	1.31" (33.4mm)	0.46oz (13.1g)	Black
HRWT08R02		1/4" Male BSPT				1.47" (37.4mm)	0.49oz (14.0g)	
HRWT08R03		3/8" Male BSPT				1.48" (37.8mm)	0.51oz (14.6g)	
HRWT10R02	10mm	1/4" Male BSPT	3	No	21mm	1.62" (41.4mm)	N/A	Black
HRWT10R03		3/8" Male BSPT				1.64" (41.8mm)		
HRWT10R04		1/2" Male BSPT	2		24mm	1.76" (44.8mm)	0.68oz (19.4g)	
HRWT12R03	12mm	3/8" Male BSPT	1	No	24mm	1.89" (48.2mm)	N/A	Black
HRWT12R04		1/2" Male BSPT				2.01" (51.2mm)		

Union Fittings

Union Straight Fittings feature two opposing push-to-connect ports.

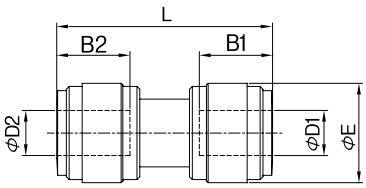

Fractional Tube Sizes

Model	Tube 1 OD	Tube 2 OD	Package Qty.	Stock	Diameter	Length	Weight	Color
HUC5/32-5/32	5/32"	5/32"	10	Yes	0.51" (13.2mm)	1.25" (31.8mm)	0.13oz (3.80g)	Natural
HUC3/16-3/16	3/16"	3/16"	10	Yes	0.54" (13.8mm)	1.27" (32.5mm)	0.14oz (4.00g)	Natural
HUC1/4-1/4	1/4"	1/4"	10	Yes	0.61" (15.5mm)	1.42" (36.2mm)	0.18oz (5.20g)	Natural
HUC5/16-5/32	5/16"	5/32"	5	No	0.69" (17.6mm)	1.44" (36.6mm)	0.22oz (6.50g)	Natural
HUC5/16-1/4		1/4"		Yes				
HUC5/16-5/16		5/16"				1.50" (38.2mm)	0.24oz (6.90g)	
HUC3/8-1/4	3/8"	1/4"	5	No	0.78" (20.0mm)	1.65" (42.1mm)	0.34oz (9.90g)	Natural
HUC3/8-5/16		5/16"		Yes		1.67" (42.5mm)		
HUC3/8-3/8		3/8"				1.68" (42.9mm)		
HUC1/2-5/16	1/2"	5/16"	5	No	0.92" (23.6mm)	2.04" (52.0mm)	0.58oz (16.7g)	Natural
HUC1/2-3/8		3/8"		Yes		2.06" (52.4mm)	0.57oz (16.3g)	
HUC1/2-1/2		1/2"				2.09" (53.2mm)	0.51oz (14.6g)	

Metric Tube Sizes

Model	Tube 1 OD	Tube 2 OD	Package Qty.	Stock	Diameter	Length	Weight	Color
HUC0404	4mm	4mm	10	No	0.51" (13.2mm)	1.25" (31.8mm)	0.13oz (3.80g)	Black
HUC0604	6mm	4mm	10	No	0.59" (15.0mm)	1.37" (35.0mm)	0.17oz (5.00g)	Black
HUC0606		6mm				1.38" (35.2mm)	0.16oz (4.70g)	
HUC0804	8mm	4mm	5	No	0.59" (15.0mm)	1.38" (35.1mm)	0.22oz (6.50g)	Black
HUC0806		6mm			0.69" (17.6mm)	1.48" (37.8mm)	0.25oz (7.10g)	
HUC0808		8mm				1.50" (38.2mm)	0.24oz (6.90g)	
HUC1006	10mm	6mm	5	No	0.69" (17.6mm)	1.65" (42.0mm)	0.34oz (9.80g)	Black
HUC1008		8mm			0.78" (20.0mm)	1.66" (42.4mm)	0.33oz (9.60g)	
HUC1010		10mm				1.68" (42.7mm)	0.32oz (9.20g)	
HUC1208	12mm	8mm	3	No	0.92" (23.6mm)	1.74" (44.4mm)	0.40oz (11.5g)	Black
HUC1210		10mm			0.90" (23.0mm)	2.03" (51.7mm)	0.52oz (15.0g)	
HUC1212		12mm				2.06" (52.4mm)	0.50oz (14.4g)	

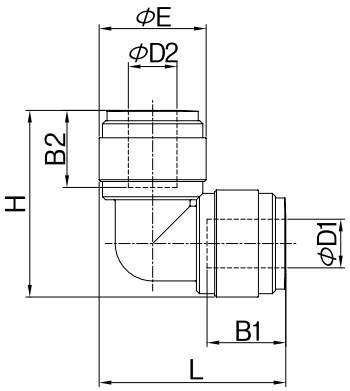

Union Elbows (Reducers Included) - HUL

Union Elbow Fittings feature two push-to-connect ports arranged at 90°.

Fractional Tube Sizes

Model	Tube 1 OD	Tube 2 OD	Package Qty.	Stock	Diameter	Length	Weight	Color
HUL5/32-5/32	5/32"	5/32"	10	Yes	0.51" (13.2mm)	0.96" (24.5mm)	0.14oz (4.00g)	Natural
HUL3/16-3/16	3/16"	3/16"	10	Yes	0.54" (13.8mm)	1.00" (25.5mm)	0.15oz (4.30g)	Natural
HUL1/4-1/4	1/4"	1/4"	10	Yes	0.61" (15.5mm)	1.13" (28.8mm)	0.19oz (5.50g)	Natural
HUL5/16-5/32	5/16"	5/32"	5	Yes	0.51" (13.2mm)	1.11" (28.3mm)	0.20oz (5.90g)	Natural
HUL5/16-1/4		1/4"			0.69" (17.6mm)	1.20" (30.7mm)	0.26oz (7.60g)	
HUL5/16-5/16		5/16"						
HUL3/8-1/4	3/8"	1/4"	5	Yes	0.78" (20.0mm)	1.41" (35.9mm)		Natural
HUL3/8-5/16		5/16"					0.39oz (11.1g)	
HUL3/8-3/8		3/8"					0.37oz (10.6g)	
HUL1/2-3/8	1/2"	3/8"	3	Yes	0.90" (23.0mm)	1.70" (43.4mm)	0.61oz (17.5g)	Natural
HUL1/2-1/2		1/2"					0.58oz (16.7g)	

Metric Tube Sizes

Model	Tube 1 OD	Tube 2 OD	Package Qty.	Stock	Diameter	Length	Weight	Color
HUL0404	4mm	4mm	10	No	0.51" (13.2mm)	0.96" (24.5mm)	0.13oz (3.90g)	Black
HUL0606	6mm	6mm	10	No	0.59" (15.0mm)	1.08" (27.6mm)	0.17oz (5.10g)	Black
HUL0804	8mm	4mm	5	No	0.68" (17.5mm)	1.11" (28.3mm)	0.20oz (5.90g)	Black
HUL0806		6mm			0.69" (17.6mm)	1.19" (30.3mm)	0.27oz (7.70g)	
HUL0808		8mm				1.20" (30.7mm)	0.26oz (7.60g)	
HUL1006	10mm	6mm	5	No	0.90" (23.0mm)	1.42" (36.1mm)	0.44oz (12.6g)	Black
HUL1008		8mm			0.78" (20.0mm)	1.39" (35.5mm)	0.35oz (10.2g)	
HUL1010		10mm				1.41" (35.8mm)	0.35oz (10.2g)	
HUL1206	12mm	6mm	5	No	0.90" (23.0mm)	1.42" (36.1mm)	0.42oz (12.0g)	Black
HUL1208		8mm				1.43" (36.5mm)	0.41oz (11.9g)	
HUL1212		12mm				1.70" (43.2mm)	0.57oz (16.4g)	

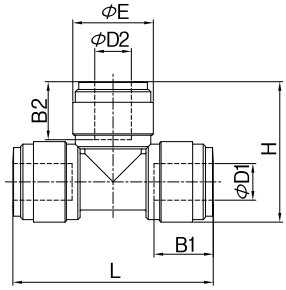

Union Tee (Reducers Included) – HUT

Union Tee Fittings provide two opposing push-to-connect ports, with a third port arranged 90° apart.

Fractional Tube Sizes

Model	Tube 1 OD	Tube 2 OD	Package Qty.	Stock	Diameter	Length	Weight	Color
HUT5/32-5/32	5/32"	5/32"	10	Yes	0.96" (24.5mm)	1.40" (35.8mm)	0.20oz (5.70g)	Natural
HUT3/16-3/16	3/16'	3/16"	10	Yes	1.00" (25.5mm)	1.46" (37.2mm)	0.21oz (6.20g)	Natural
HUT1/4-1/4	1/4"	1/4"	5	Yes	1.13" (28.8mm)	1.65" (42.0mm)	0.28oz (8.10g)	Natural
HUT5/16-5/16	5/16"	5/16"	5	Yes	1.20" (30.7mm)	1.72" (43.8mm)	0.37oz (10.6g)	Natural
HUT3/8-1/4-3/8	3/8"	1/4"	3	Yes	1.26" (32.1mm)	1.92" (48.8mm)	0.43oz (12.2g)	Natural
HUT3/8-3/8		3/8"			1.41" (35.9mm)	2.03" (51.8mm)	0.54oz (15.4g)	
HUT1/2-1/2	1/2"	1/2"	3	Yes	1.70" (43.4mm)	2.51" (63.8mm)	0.81oz (23.2g)	Natural

Metric Tube Sizes

Model	Tube 1 OD	Tube 2 OD	Package Qty.	Stock	Diameter	Length	Weight	Color
HUT0404	4mm	4mm	10	No	0.96" (24.5mm)	1.40" (35.8mm)	0.20oz (5.80g)	Black
HUT0606	6mm	6mm	5	No	1.08" (27.6mm)	1.58" (40.2mm)	0.25oz (7.30g)	Black
HUT0808	8mm	8mm	5	No	1.20" (30.7mm)	1.72" (43.8mm)	0.37oz (10.6g)	Black
HUT100608	10mm	6mm / 8mm	3	No	1.38" (35.1mm)	2.01" (51.3mm)	0.55oz (15.6g)	Black
HUT100610		6mm / 10mm			1.26" (32.1mm)	2.03" (51.6mm)	0.42oz (12.0g)	
HUT1010		10mm			1.40" (35.8mm)		0.51oz (14.6g)	
HUT121012	12mm	10mm / 12mm	2	No	1.67" (42.5mm)	2.49" (63.4mm)	0.85oz (24.2g)	Black
HUT1212		12mm			1.70" (43.2mm)		0.81oz (23.2g)	

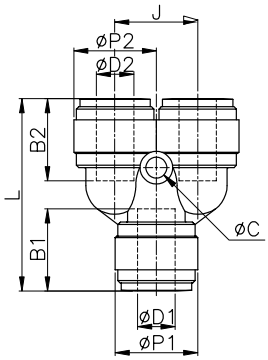

Equal Union Y (Reducers Included) – HUY

Equal Union Y Fittings provide two parallel push-to-connect ports, with a third opposing port.

Fractional Tube Sizes

Model	Tube 1 OD	Tube 2 OD	Package Qty.	Stock	Diameter	Length	Weight	Color
HUY5/32-5/32	5/32"	5/32"	10	Yes	1.08" (27.6mm)	1.32" (33.7mm)	0.23oz (6.70g)	Natural
HUY3/16-3/16	3/16"	3/16"	5	Yes	1.08" (27.6mm)	1.34" (34.1mm)	0.23oz (6.80g)	Natural
HUY1/4-1/4	1/4"	1/4"	5	Yes	1.22" (31.0mm)	1.52" (38.8mm)	0.31oz (8.80g)	Natural
HUY5/16-5/16	5/16"	5/16"	5	Yes	1.38" (35.2mm)	1.61" (41.0mm)	0.41oz (11.8g)	Natural
HUY3/8-3/8	3/8"	3/8"	3	Yes	1.57" (40.0mm)	1.82" (46.4mm)	0.58oz (16.7g)	Natural
HUY1/2-1/2	1/2"	1/2"	2	Yes	1.81" (46.0mm)	2.23" (56.8mm)	0.88oz (25.1g)	Natural

Metric Tube Sizes

Model	Tube 1 OD	Tube 2 OD	Package Qty.	Stock	Diameter	Length	Weight	Color
HUY0404	4mm	4mm	10	No	1.08" (27.6mm)	1.32" (33.7mm)	0.23oz (6.70g)	Black
HUY0606	6mm	6mm	5	No	1.22" (31.0mm)	1.52" (38.8mm)	0.32oz (9.20g)	Black
HUY0808	8mm	8mm	5	No	1.38" (35.2mm)	1.61" (41.0mm)	0.40oz (11.6g)	Black
HUY1008	10mm	8mm	3	No	1.57" (40.0mm)	1.80" (45.9mm)	0.59oz (16.8g)	Black
HUY1010	10mm	10mm	3	No	1.57" (40.0mm)	1.81" (46.2mm)	0.56oz (16.0g)	Black
HUY1212	12mm	12mm	2	No	1.81" (46.0mm)	2.22" (56.4mm)	0.92oz (26.3g)	Black

Fluidfit™ Push-to-Connect Fittings

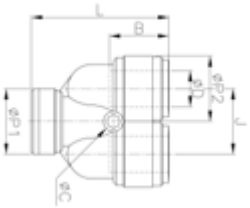

Union "Y" – HBU

Union "Y" Fittings contain two parallel push-to-connect ports with a single opposing port.

Fractional Tube Sizes

Model	Tube O.D.	Package Qty.	Stock	Length	Weight	Color
HBU1/2-1/2	1/2"	5	No	0.90" (23.0mm)	0.84oz (23.9g)	Natural

Barb Fittings

Barb Adapter – HCBB

Barb Adapters feature a hose barb opposing a push to connect port.

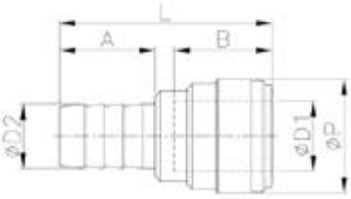

Metric Tube Sizes

Model	Tube OD	Barb OD	Package Qty.	Stock	Diameter	Length	Weight	Color
HCBB1210	12mm	10mm	N/A	No	0.90" (23.0mm)	1.84" (46.9mm)	0.29oz (8.50g)	Black
HCBB15-1/2	15mm	1/2"	N/A	No	1.10" (28.0mm)	2.13" (54.2mm)	0.49oz (14.0g)	Black
HCBB22-1/2	22mm	1/2"	N/A	No	1.40" (35.7mm)	2.31" (58.8mm)	0.77oz (22.1g)	Black
HCBB22-3/4	22mm	3/4"	N/A	No	1.40" (35.7mm)	2.61" (66.5mm)	0.90oz (25.7g)	Black

Barb Mender – HCJB

Barb Menders feature a barb opposing an insert stem, allowing the connection of a hose to a push-to-connect port.

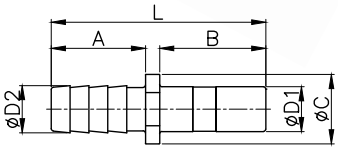

Fractional Tube Sizes

Model	Stem OD	Barb OD	Package Qty.	Stock	Diameter	Length	Weight	Color
HCJB1/4-1/4	1/4"	1/4"	N/A	No	0.46" (11.8mm)	1.53" (39.0mm)	0.04oz (1.20g)	Natura
HCJB5/16-5/16	5/16"	5/16"	N/A	No	0.48" (12.2mm)	1.57" (40.0mm)	0.07oz (2.10g)	Natura
HCJB3/8-5/16	3/8"	5/16"	N/A	No	0.57" (14.7mm)	1.72" (43.5mm)	0.09oz (2.60g)	Natura
HCJB3/8-3/8		3/8"				1.79" (45.5mm)	0.08oz (2.50g)	
HCJB1/2-3/8	1/2"	3/8"	N/A	No	0.72" (18.5mm)	1.98" (50.5mm)	0.14oz (4.10g)	Natura

Metric Tube Sizes

Model	Stem OD	Barb OD	Package Qty.	Stock	Diameter	Length	Weight	Color
HCJB0604	6mm	4.5mm	10	No	0.44" (11.4mm)	1.50" (38.2mm)	0.03oz (1.00g)	Black
HCJB0606		6.5mm (1/4")						
HCJB0806	8mm	6.5mm (1/4")	10	No	0.48" (12.2mm)	1.57" (40.0mm)	0.05oz (1.70g)	Black
HCJB1006	10mm	6.5mm (1/4")	10	No	0.57" (14.7mm)	1.71" (43.5mm)	0.08oz (2.30g)	Black
HCJB1008		8.6mm (5/16")						

Plug-In Fittings

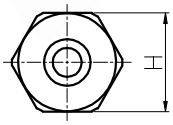

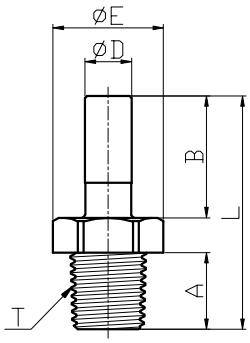

Straight Plug-In Stem Adapter - HCJ

Straight Plug-In Stem Adapters feature a push-to-connect stem opposing a male thread.

Fractional Tube Sizes

Model	Stem OD	Thread	Package Qty.	Stock	Hex	Length	Weight	Color
HCJ5/32-N01	5/32"	1/8" Male NPT	10	Yes	1/2"	1.30" (33.1mm)	0.06oz (1.90g)	Natural
HCJ5/32-N02		1/4" Male NPT			5/8"	1.46" (37.2mm)	0.12oz (3.60g)	
HCJ3/16-N01	3/16"	1/8" Male NPT	10	Yes	1/2"	1.30" (33.1mm)	0.07oz (2.00g)	Natural
HCJ1/4-N01	1/4"	1/8" Male NPT	10	Yes	1/2"	1.34" (34.1mm)	0.07oz (2.10g)	Natural
HCJ1/4-N02		1/4" Male NPT			5/8"	1.50" (38.2mm)	0.13oz (3.80g)	
HCJ5/16-N01	5/16"	1/8" Male NPT	10	Yes	1/2"	1.38" (35.1mm)	0.09oz (2.80g)	Natural
HCJ5/16-N02		1/4" Male NPT	5		5/8"	1.54" (39.2mm)	0.13oz (3.90g)	
HCJ5/16-N03		3/8" Male NPT			3/4"	1.58" (40.3mm)	0.20oz (5.90g)	
HCJ3/8-N02	3/8"	1/4" Male NPT	5	Yes	5/8"	1.66" (42.2mm)	0.15oz (4.50g)	Natural
HCJ3/8-N03		3/8" Male NPT			3/4"	1.70" (43.3mm)	0.22oz (6.50g)	
HCJ1/2-N03	1/2"	3/8" Male NPT	5	Yes	3/4'	1.86" (47.3mm)	0.24oz (6.90g)	Natural
HCJ1/2-N04		1/2" Male NPT	3		15/16"	2.01" (51.3mm)	0.40oz (11.4g)	

Metric Tube Sizes

Model	Stem OD	Thread	Package Qty.	Stock	Hex	Length	Weight	Color
HCJ04R01	4mm	1/8" Male BSPT (R)	10	No	13mm	1.30" (33.1mm)	0.06oz (1.80g)	Black
HCJ04R02		1/4" Male BSPT (R)			17mm	1.46" (37.1mm)	0.12oz (3.50g)	
HCJ06R01	6mm	1/8" Male BSPT (R)	10	No	13mm	1.36" (34.6mm)	0.07oz (2.20g)	Black
HCJ06R02		1/4" Male BSPT (R)			17mm	1.51" (38.6mm)	0.13oz (3.70g)	
HCJ08R01	8mm	1/8" Male BSPT (R)	10	No	13mm	1.42" (36.1mm)	0.07oz (2.20g)	Black
HCJ08R02		1/4" Male BSPT (R)	5		17mm	1.57" (40.1mm)	0.13oz (3.80g)	
HCJ08R03		3/8" Male BSPT (R)			21mm	1.59" (40.5mm)	0.18oz (5.30g)	
HCJ10R02	10mm	1/4" Male BSPT (R)	5	No	17mm	1.69" (43.1mm)	0.15oz (4.50g)	Black
HCJ10R03		3/8" Male BSPT (R)			21mm	1.73" (44.0mm)	0.21oz (6.10g)	
HCJ10R04		1/2" Male BSPT (R)	3		24mm	1.85" (47.0mm)	0.34oz (9.70g)	
HCJ12R03	12mm	3/8" Male BSPT (R)	5	No	21mm	1.88" (48.0mm)	0.23oz (6.80g)	Black
HCJ12R04		1/2" Male BSPT (R)	3		24mm	2.00" (51.0mm)	0.35oz (10.2g)	

Fluidfit™ Push-to-Connect Fittings

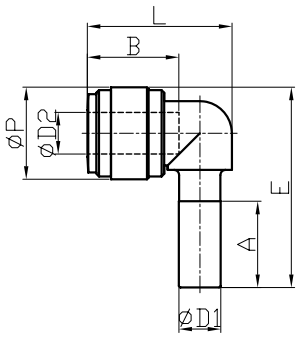

Plug-In Stem Elbow Adapter - HLJ

Plug-In Stem Elbow Adapters feature an insert stem with a push-to-connect port arranged 90° apart.

Fractional Tube Sizes

Model	Stem OD	Tube OD	Package Qty.	Stock	Width	Length	Weight	Color
HLJ5/32-5/32	5/32"	5/32"	10	Yes	0.86" (21.9mm)	1.18" (30.1mm)	0.08oz (2.50g)	Natural
HLJ 3/16-3/16	3/16"	3/16"	10	Yes	0.88" (22.5mm)	1.23" (31.4mm)	0.10oz (2.90g)	Natural
HLJ 1/4-1/4	1/4"	1/4"	10	Yes	0.98" (25.1mm)	1.37" (34.8mm)	0.13oz (3.70g)	Natural
HLJ 5/16-5/16	5/16"	5/16"	5	Yes	1.09" (27.7mm)	1.50" (38.3mm)	0.19oz (5.40g)	Natural
HLJ 3/8-1/4	3/8"	1/4"	5	Yes	0.98" (25.1mm)	1.51" (38.6mm)	0.15oz (4.50g)	Natural
HLJ 3/8-5/16		5/16"			1.22" (31.0mm)	1.70" (43.2mm)	0.28oz (8.10g)	
HLJ 3/8-3/8		3/8'			1.23" (31.4mm)	1.70" (43.2mm)	0.27oz (7.90g)	
HLJ 1/2-1/2	1/2"	1/2"	3	Yes	1.54" (39.2mm)	2.01" (51.2mm)	0.44oz (12.7g)	Natural

Metric Tube Sizes

Model	Stem OD	Tube OD	Package Qty.	Stock	Width	Length	Weight	Color
HLJ0404	4mm	4mm	10	No	0.86" (21.9mm)	1.18" (30.1mm)	0.08oz (2.50g)	Black
HLJ0606	6mm	6mm	10	No	0.98" (25.1mm)	1.37" (34.8mm)	0.13oz (3.70g)	Black
HLJ0608		8mm			1.02" (26.0mm)	1.44" (36.8mm)	0.16oz (4.70g)	
HLJ0808	8mm	8mm	5	No	1.09" (27.7mm)	1.50" (38.3mm)	0.18oz (5.30g)	Black
HLJ1006	10mm	6mm	5	No	1.20" (30.6mm)	1.70" (43.2mm)	0.27oz (7.80g)	Black
HLJ1008		8mm			1.22" (31.0mm)		0.28oz (8.20g)	
HLJ1010		10mm			1.23" (31.3mm)		0.26oz (7.40g)	
HLJ1212	12mm	12mm	3	No	1.53" (39.0mm)	2.01" (51.2mm)	0.44oz (12.6g)	Black

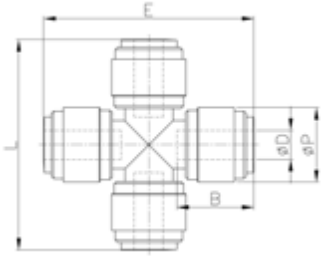

Union Cross – HZA

Union Cross Fittings provide four opposing push-to-connect fittings.

Metric Tube Sizes

Model	Tube OD	Package Qty.	Stock	Length	Weight	Color
HZA0606	6mm	3	No	1.72" (43.8mm)	0.34oz (9.7g)	Black

Plug-In Tube Reducer - HGJ

Plug-In Tube Reducers feature an Insert stem with and opposing push-to-connect port of a different size.

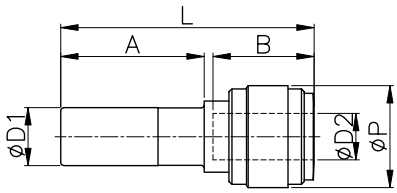

Fractional Tube Sizes

Model	Stem OD	Tube OD	Package Qty.	Stock	Width	Length	Weight	Color
HGJ1/4-5/32	1/4"	5/32"	10	Yes	0.51" (13.2mm)	1.44" (36.7mm)	0.08oz (2.40g)	Natural
HGJ5/16-1/4	5/16"	1/4"	10	Yes	0.61" (15.5mm)	1.59" (40.6mm)	0.11oz (3.40g)	Natural
HGJ3/8-1/4	3/8"	1/4"	5	Yes	0.69" (17.6mm)	1.72" (43.9mm)	0.16oz (4.70g)	Natural
HGJ3/8-5/16		5/16"				1.74" (44.3mm)		
HGJ1/2-3/8	1/2"	3/8"	5	Yes	0.78" (20.0mm)	2.03" (51.7mm)	0.25oz (7.10g)	Natural

Metric Tube Sizes

Model	Stem OD	Tube OD	Package Qty.	Stock	Width	Length	Weight	Color
HGJ0604	6mm	4mm	10	No	0.41" (10.5mm)	1.44" (36.7mm)	0.08oz (2.40g)	Black
HGJ0804	8mm	4mm	10	No	0.61" (15.5mm)	0.88" (22.5mm)	0.13oz (3.70g)	Black
HGJ0806		6mm			0.41" (10.5mm)		0.12oz (3.50g)	
HGJ0810		10mm	5		0.78" (20.0mm)		0.19oz (5.40g)	
HGJ1006	10mm	6mm	5	No	0.49" (12.5mm)	0.97" (24.8mm)	0.18oz (5.20g)	Black
HGJ1008		8mm					0.17oz (5.10g)	
HGJ1208	12mm	8mm	N/A	No	0.78" (20.0mm)	1.16" (29.5mm)	0.25oz (7.30g)	Black
HGJ1210		10mm					0.24oz (6.90g)	

Plug-In Barb Elbow – HLJB

Plug-In Barb Elbows feature an insert stem arranged 90° apart from a hose barb.

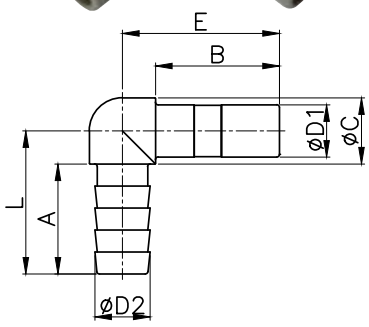

Fractional Tube Sizes

Model	Stem OD	Tube OD	Package Qty.	Stock	Width	Length	Weight	Color
HLJB3/8-5/16	3/8"	5/16"	N/A	No	0.94" (24.0mm)	1.12" (28.5mm)	0.10oz (3.10g)	Natural
HLJB3/8-3/8		3/8"			1.02" (26.0mm)		0.11oz (3.30g)	

Metric Tube Sizes

Model	Stem OD	Tube OD	Package Qty.	Stock	Width	Length	Weight	Color
HLJB1006	10mm	6.5mm (1/4")	10	No	0.94" (24.0mm)	1.12" (28.5mm)	0.10oz (3.10g)	Black
HLJB1008		8.6mm (5/16")					0.11oz (3.30g)	

Bulkhead Fittings

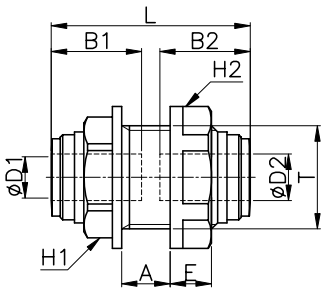

Bulkhead Union (Reducers Included) - HMM

Bulkhead Union Fittings allow for passage through a partition or panel by connecting two tubes together.

Fractional Tube Sizes

Model	Tube 1 OD	Tube 2 OD	Package Qty.	Stock	Hex	Panel Hole	Length	Weight	Color
HMM5/32-5/32	5/32"	5/32"	5	Yes	17mm	0.53" (13.5mm)	1.23" (31.4mm)	0.24oz (6.90g)	Natural
HMM1/4-1/4	1/4"	1/4"	5	Yes	19mm	0.61" (15.5mm)	1.34" (34.2mm)	0.33oz (9.40g)	Natural
HMM1/4-3/8		3/8"	3	No	24mm	0.88" (22.5mm)	1.88" (47.9mm)	0.73oz (20.9g)	
HMM5/16-5/16	5/16"	5/16"	3	Yes	21mm	0.72" (18.5mm)	1.51" (38.5mm)	0.50oz (14.2g)	Natural
HMM3/8-3/8	3/8"	3/8"	3	Yes	24mm	0.88" (22.5mm)	1.66" (42.4mm)	0.70oz (20.1g)	Natural
HMM1/2-1/2	1/2"	1/2"	2	Yes	27mm	1.00" (25.5mm)	2.03" (51.8mm)	0.97oz (27.6g)	Natural

Metric Tube Sizes

Model	Tube 1 OD	Tube 2 OD	Package Qty.	Stock	Hex	Panel Hole	Length	Weight	Color
HMM0404	4mm	4mm	5	No	17mm	0.53" (13.5mm)	1.27" (32.4mm)	0.24oz (6.90g)	Black
HMM0604	6mm	4mm	5	No	19mm	0.61" (15.5mm)	1.39" (35.5mm)	0.34oz (9.80g)	Black
HMM0606		6mm					1.40" (35.7mm)	0.33oz (9.60g)	
HMM0806	8mm	6mm	3	No	21mm	0.72" (18.5mm)	1.50" (38.1mm)	0.50oz (14.3g)	Black
HMM0808	6mm	8mm					1.51" (38.5mm)	0.49oz (14.0g)	
HMM1010	10mm	10mm	3	No	24mm	0.88" (22.5mm)	1.66" (42.2mm)	0.68oz (19.5g)	Black
HMM1212	12mm	12mm	2	No	27mm	0.88" (25.5mm)	2.02" (51.4mm)	0.99oz (28.2g)	Black

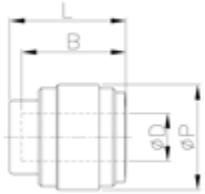

Cap – HPF

Caps provide a method of blocking a section of tubing.

Fractional Tube Sizes

Model	Tube O.D.	Package Qty.	Stock	Length	Weight	Color
HPF1/4	1/4"	10	No	0.74" (18.9mm)	0.09oz (2.7g)	Black
HPF5/16	5/16"	10	No	0.76" (19.5mm)	0.12oz (3.6g)	Black
HPF38	3/8"	N/A	No	0.87" (22.2mm)	0.17oz (5.0g)	Black
HPF1/2	1/2"	N/A	No	1.05" (26.9mm)	0.24oz (7.0g)	Black

Metric Tube Sizes

Model	Tube O.D.	Package Qty.	Stock	Length	Weight	Color
HPF06	6mm	10	No	0.74" (18.9mm)	0.09oz (2.8g)	Black
HPF08	8mm	10	No	0.76" (19.5mm)	0.12oz (3.6g)	Black
HPF10	10mm	N/A	No	0.79" (20.1mm)	0.16oz (4.7g)	Black
HPF12	12mm	N/A	No	1.05" (26.7mm)	0.25oz (7.3g)	Black

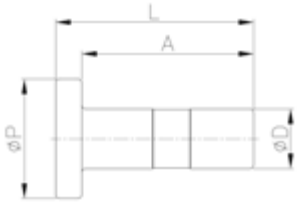

Plug – HPP

Plugs provide a method of blocking a push-to-connect port.

Fractional Tube Sizes

Model	Tube O.D.	Package Qty.	Stock	Length	Weight	Color
HPP5/32	5/32"	20	No	0.88" (22.5mm)	0.02oz (0.8g)	Natural
HPP3/16	3/16"	20	No	0.88" (22.5mm)	0.03oz (0.9g)	Natural
HPP1/4	1/4"	20	No	0.96" (24.5mm)	0.04oz (1.2g)	Natural
HPP5/16	5/16"	10	No	1.04" (26.5mm)	0.06oz (1.8g)	Natural
HPP3/8	3/8"	10	No	1.18" (30.0mm)	0.09oz (2.7g)	Natural
HPP1/2	1/2"	10	No	1.33" (34.0mm)	0.15oz (4.4g)	Natural

Metric Tube Sizes

Model	Tube O.D.	Package Qty.	Stock	Length	Weight	Color
HPP04	4mm	20	No	0.88" (22.5mm)	0.02oz (0.8g)	Black
HPP06	6mm	20	No	0.96" (24.5mm)	0.03oz (1.1g)	Black
HPP08	8mm	10	No	1.04" (26.5mm)	0.06oz (1.8g)	Black
HPP10	10mm	10	No	1.18" (30.0mm)	0.09oz (2.8g)	Black
HPP12	12mm	10	No	1.33" (34.0mm)	0.14oz (4.0g)	Black

Check-Valve Fittings

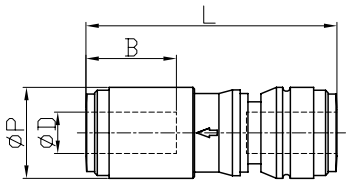

Check-Valve Fittings - HCVU

Check-Valve Fittings prevent the return of fluids in a circuit. Each check valve features opposing push-to-connect ports.

Fractional Tube Sizes

Model	Tube 1 OD	Tube 2 OD	Package Qty.	Stock	Diameter	Length	Weight	Color
HCVU1/4-1/4	1/4"	1/4"	5	Yes	0.61" (15.5mm)	1.79" (45.5mm)	0.26oz (7.40g)	Natural
HCVU5/16-5/16	5/16"	5/16"	5	Yes	0.69" (17.6mm)	1.93" (48.6mm)	0.35oz (10.0g)	Natural
HCVU3/8-3/8	3/8"	3/8"	3	Yes	0.78" (20.0mm)	2.27" (57.8mm)	0.52oz (15.0g)	Natural
HCVU1/2-1/2	1/2"	1/2"	3	Yes	0.92" (23.6mm)	2.67" (67.9mm)	0.75oz (21.5g)	Natural

Metric Tube Sizes

Model	Tube 1 OD	Tube 2 OD	Package Qty.	Stock	Diameter	Length	Weight	Color
HCVU0404	4mm	4mm	4	No	0.51" (13.2mm)	1.74" (44.4mm)	0.19oz (5.50g)	Black
HCVU0606	6mm	6mm	5	No	0.61" (15.5mm)	1.79" (45.5mm)	0.26oz (7.40g)	Black
HCVU0808	8mm	8mm	5	No	0.69" (17.6mm)	1.93" (48.6mm)	0.35oz (10.0g)	Black
HCVU1010	10mm	10mm	3	No	0.78" (20.0mm)	2.27" (57.6mm)	0.51oz (14.5g)	Black
HCVU1212	12mm	12mm	3	No	0.92" (23.6mm)	2.67" (67.5mm)	0.77oz (22.1g)	Black

Ball Valves

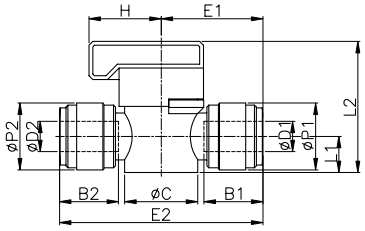

Ball Valves - HBVU

Ball Vales allow users to close off fluids in a circuit. Each ball valve features opposing push-to-connect ports.

Fractional Tube Sizes

Model	Tube OD	Package Qty.	Stock	Width	Length	Weight	Color
HBVU1/4-1/4	1/4"	3	Yes	2.03" (51.7mm)	1.35" (34.5mm)	0.56oz (16.0g)	Natural
HBVU5/16-5/16	5/16"	3	Yes	2.10" (53.5mm)	1.35" (34.5mm)	0.61oz (17.4g)	Natural
HBVU3/8-3/8	3/8"	2	Yes	2.48" (63.2mm)	1.66" (42.3mm)	1.02oz (29.0g)	Natural
HBVU1/2-1/2	1/2"	2	Yes	2.78" (70.8mm)	1.66" (42.3mm)	1.24oz (35.4g)	Natural

Metric Tube Sizes

Model	Tube OD	Package Qty.	Stock	Width	Length	Weight	Color
HBVU0606	6mm	5	No	2.03" (51.7mm)	1.01" (25.9mm)	0.56oz (16.0g)	Black
HBVU0808	8mm	5	No	2.10" (53.5mm)	1.05" (26.8mm)	0.61oz (17.4g)	Black
HBVU1010	10mm	2	No	2.48" (63.0mm)	1.24" (31.5mm)	1.02oz (29.0g)	Black
HBVU1212	12mm	2	No	2.77" (70.4mm)	1.38" (35.2mm)	1.24oz (35.4g)	Black

Flow Control Valves

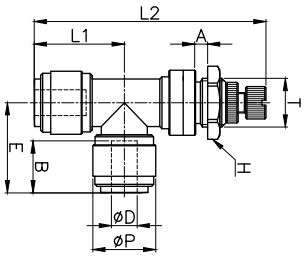

Panel Mount Run Style Flow Control – HSLB

Panel Mount Run Style Flow Controls feature two push to connect ports arranged 90° apart. A panel mounting nut enables users to install within an enclosure.

Fractional Tube Sizes

Model	Tube OD	Package Qty.	Stock	Hex	Panel Hole	Length	Weight	Color
HSLB1/4-1/4	1/4"	5	No	16mm	0.43" (11.0mm)	2.24" (57.1mm)	1.01oz (28.7g)	Natural
HSLB3/8-3/8	3/8"	N/A	No	19mm	0.55" (14.0mm)	2.66" (67.8mm)	1.90oz (54.0g)	Natural

Metric Tube Sizes

Model	Tube OD	Package Qty.	Stock	Hex	Panel Hole	Length	Weight	Color
HSLB0606	6mm	5	No	16mm	0.43" (11.0mm)	2.24" (57.1mm)	1.01oz (28.7g)	Black
HSLB1010	10mm	N/A	No	19mm	0.55" (14.0mm)	2.66" (67.7mm)	1.90oz (54.0g)	Black

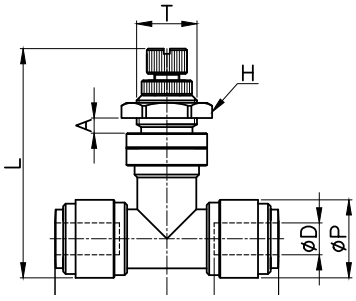

Panel Mount Branch Style Flow Control - HSTB

Panel Mount Branch Style Flow Controls feature two opposing push to connect ports. A panel mounting nut enables users to install within an enclosure.

Fractional Tube Sizes

Model	Tube OD	Package Qty.	Stock	Hex	Panel Hole	Length	Weight	Color
HSTB1/4-1/4	1/4"	5	No	16mm	0.43" (11.0mm)	1.98" (50.4mm)	1.01oz (28.9g)	Natural
HSTB3/8-3/8	3/8"	N/A	No	19mm	0.55" (14.0mm)	2.29" (58.4mm)	1.90oz (54.0g)	Natural

Metric Tube Sizes

Model	Tube OD	Package Qty.	Stock	Hex	Panel Hole	Length	Weight	Color
HSTB0606	6mm	5	No	16mm	0.43" (11.0mm)	1.98" (50.4mm)	1.01oz (28.9g)	Black
HSTB1010	10mm	N/A	No	19mm	0.55" (14.0mm)	2.29" (58.4mm)	1.90oz (54.0g)	Black

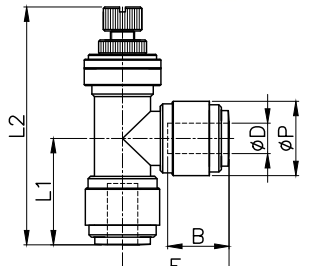

Run Style Flow Control – HSLU

Panel Mount Run Style Flow Controls feature two opposing push to connect ports, enabling users to install within an enclosure.

Fractional Tube Sizes

Model	Tube OD	Package Qty.	Stock	Hex	Length	Weight	Color
HSLU1/4-1/4	1/4"	5	No	16mm	1.95" (49.6mm)	0.71oz (20.3g)	Natural
HSLU3/8-3/8	3/8"	N/A	No	19mm	2.32" (59.1mm)	1.37oz (39.0g)	Natural

Metric Tube Sizes

Model	Tube OD	Package Qty.	Stock	Hex	Length	Weight	Color
HSLU0606	6mm	5	No	16mm	2.11" (53.6mm)	0.71oz (20.3g)	Black
HSLU1010	10mm	N/A	No	19mm	2.54" (64.7mm)	1.37oz (39.0g)	Black

Fluidfit™ Push-to-Connect Fittings

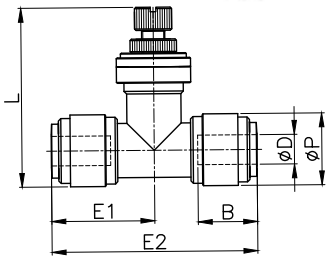

Branch Style Flow Control – HSTU

Branch Style Flow Controls feature two push to connect ports arranged 90° apart.

Fractional Tube Sizes

Model	Tube OD	Package Qty.	Stock	Hex	Length	Weight	Color
HSTU1/4-1/4	1/4"	5	No	16mm	1.48" (37.7mm)	0.72oz (20.6g)	Natural
HSTU3/8-3/8	3/8"	N/A	No	19mm	1.73" (44.0mm)	1.38oz (39.4g)	Natural

Metric Tube Sizes

Model	Tube OD	Package Qty.	Stock	Hex	Length	Weight	Color
HSTU0606	6mm	5	No	16mm	1.74" (44.4mm)	0.72oz (20.6g)	Black
HSTU1010	10mm	N/A	No	19mm	2.05" (52.1mm)	1.38oz (39.4g)	Black

Locking Clips

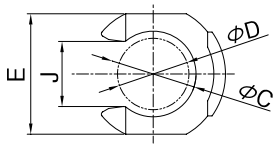

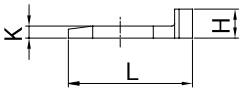

Locking Clips - HCP

Locking Clips allow users to secure the release ring of any push-to-connect fitting, providing a layer of security to prevent unwanted disconnection.

Fractional Tube Sizes

Model	Tube OD	Package Qty.	Stock	Width	Length	Weight	Color
HCP5/32	5/32"	100	Yes	0.40" (10.2mm)	0.43" (11.0mm)	0.003oz (0.09g)	Natural
HCP3/16	3/16"	100	Yes	0.40" (10.2mm)	0.43" (11.0mm)	0.003oz (0.09g)	Natural
HCP1/4	1/4"	100	Yes	0.45" (11.6mm)	0.45" (11.6mm)	0.004oz (0.12g)	Natural
HCP5/16	5/16"	100	Yes	0.53" (13.5mm)	0.54" (13.9mm)	0.005oz (0.16g)	Natural
HCP3/8	3/8"	100	Yes	0.62" (16.0mm)	0.64" (16.4mm)	0.008oz (0.23g)	Natural
HCP1/2	1/2"	100	Yes	0.74" (19.0mm)	0.74" (19.0mm)	0.010oz (0.30g)	Natural

Metric Tube Sizes

Model	Tube OD	Package Qty.	Stock	Width	Length	Weight	Color
HCP04	4mm	100	No	0.40" (10.2mm)	0.43" (11.0mm)	0.003oz (0.09g)	Black
HCP06	6mm	100	No	0.45" (11.6mm)	0.45" (11.6mm)	0.004oz (0.12g)	Black
HCP08	8mm	100	No	0.53" (13.5mm)	0.54" (13.9mm)	0.005oz (0.16g)	Black
HCP10	10mm	100	No	0.62" (16.0mm)	0.64" (16.4mm)	0.008oz (0.23g)	Black
HCP12	12mm	100	No	0.74" (19.0mm)	0.74" (19.0mm)	0.010oz (0.30g)	Black

Fluidfit™ Push-to-Connect Fittings

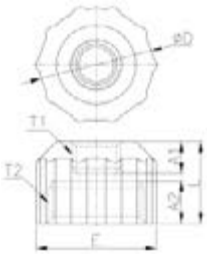

BSPP Reducer Fitting – HUFF

BSPP Reducer Fittings provide a method of installing a smaller Male BSPP (G) Thread onto a larger Male BSPP (G) thread.

Model	Thread 1	Thread 2	Stock	Diameter	Length	Weight	Color
HUFF G02-G06	1/4 Female BSPP (G)	3/4 Female BSPP (G)	No	1.24" (31.5mm)	1.31" (33.5mm)	0.55oz (15.6g)	Natural
HUFF G01-G06	3/8 Female BSPP (G)	3/4 Female BSPP (G)	No	1.24" (31.5mm)	1.31" (33.5mm)	0.51oz (14.5g)	Natural

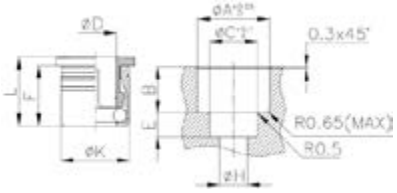

Press-Fit Cartridge Fitting – HCAS-F

Press-Fit Cartridge Fittings are a great way for manufacturers to integrate push-to-connect fittings into equipment without the need for addition drill and tap operations. Recommended for use with compressed gas only.

Model	Tube O.D.	Install Diameter	Cartridge Depth	Stock	Package Qty	Weight
HCAS-F04	4mm	10.0mm	12.0mm	No	20	0.13oz (3.8g)
HCAS-F06	6mm	11.0mm	12.6mm	No	20	0.11oz (3.2g)
HCAS-F08	8mm	13.0mm	13.2mm	No	20	0.13oz (3.9g)
HCAS-F10	10mm	15.0mm	14.3mm	No	N/A	0.16oz (4.7g)
HCAS-F12	12mm	17.5mm	16.9mm	No	N/A	0.25oz (7.2g)

Press-Fit Cartridge Fitting with O-Ring – HCAS-H

Press-Fit Cartridge Fittings are a great way for manufacturers to integrate push-to-connect fittings into equipment without the need for addition drill and tap operations. These units are supplied with an O-Ring for sealing. Recommended for use with fluids.

Model	Tube O.D.	Install Diameter	Cartridge Depth	Stock	Package Qty	Weight
HCAS-H04	4mm	12.5mm	6.8mm	No	20	0.14oz (4.2g)
HCAS-H06	6mm	13.4mm	6.6mm	No	20	0.13oz (3.9g)
HCAS-H08	8mm	13.8mm	7.4mm	No	10	0.12oz (3.5g)
HCAS-H10	10mm	16.0mm	8.8mm	No	10	0.17oz (5.0g)
HCAS-H12	12mm	19.1mm	10.8mm	No	10	0.31oz (9.0g)

Spiral Recoil Hose

Spiral Hose General Information

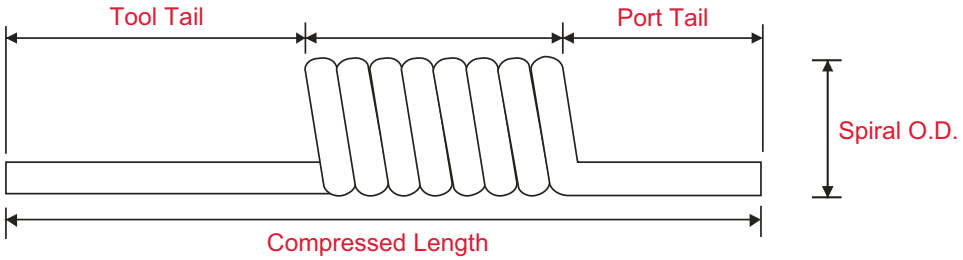

Total Length: Total Length of Tubing before Spiraling
Working Length: How Far the Spiral (Including Tails) will Stretch (Also known as Service Length)
Tail Length: Straight Lengths of Hose on the Ends of Spirals
Spiral OD: Outside Diameter of the Spiral Assembly

Specifications by Series

Series	Working Pressure (at 68F)	Burst Pressure (at 68F)	Temperature Range	Vacuum Rating	Hardness	Tail 1 Length	Tail 2 Length	Safety Factor	Working Length vs Total	Material
Technithane™	140 psi (8 Bar)	420 psi (30 Bar)	-68F (-55C) to 140F (60C)	28" HG	Shore 98A	20 in	4 in	3:1	80%	Polyurethane (PU)
Strong™ Spiral	140 psi (8 Bar)	420 psi (30 Bar)	-68F (-55C) to 140F (60C)	28" HG	Shore 98A	20 in	4 in	3:1	80%	Polyurethane (PU)
Strong-Plus™ Sprial	140 psi (8 Bar)	420 psi (30 Bar)	-68F (-55C) to 140F (60C)	28" HG	Shore 98A + 60A	60 in	4 in	3:1	60%	Polyurethane (PU)
Armorthane™ Spiral	310 psi (21 Bar)	930 psi (63 Bar)	-40F (-40C) to 120F (49C)	28" HG	Shore 98A + 85A	20 in	4 in	3:1	80%	Reinforced Polyurethane (PU)
Nylon Spiral	200 psi (14,3 Bar)	800 psi (57 Bar)	-60F (-52C) to 200F (93C)	28" HG	Shore 70D	None	None	4:1	80%	Nylon (PA)

Standard Colors by Series

Series	Black	Clear	Clear Blue	Green	Gray	Light Green	Light Blue	Navy Blue	Orange	Red	White	Yellow
Technithane™	✓	✓	✓	✓	✓	✓	✓	✓	✓	✓	✓	✓
Strong™ Spiral	✓	x	x	x	x	✓	x	✓	✓	x	x	✓
Strong-Plus™ Sprial	x	x	x	x	x	✓	x	✓	✓	x	x	x
Armorthane™ Spiral	x	x	✓	x	x	x	x	x	x	x	x	x
Nylon Spiral	x	x	x	x	x	x	x	x	x	✓	x	✓
Availability is Subject to Change, Contact ATP												

Spiral Recoil Hose

Technithane™ Polyurethane Spiral Hose

All Technithane™ product lines have been consolidated into a single offering, including Techniblue™ and Auto Spiral.

Technithane™ Spirals are manufactured from tough polyurethane resin, providing a flexible & lightweight alternative to Nylon Spirals. Technithane™ Spirals' 98A construction provides excellent memory and retraction strength.

- Lightweight and Abrasion-Resistant
- Resists Kinking
- Reusable Nickel-Plated Fittings with Bend Restrictors
- Excellent Coil Memory
- Thread Sealant Supplied on all Fittings
- Widest Variety of Colors, Sizes, and Threads in ATP's Offering
- Available with Threads or Pneumatic QD Fittings
- Custom Assemblies Available – Contact ATP

What's the difference between Techniblue™, Technithane™, and Auto Spiral?

- All Lines Were Made from the Same Material with the Same Fittings
- Techniblue™ Spirals Were **Clear Blue** and Were Held in Stock
- Auto Spirals Were Sold in **Working Length** Rather than the Industry Standard of Total Length

Specifications	
Material	Polyurethane (Ether-Based)
Hardness	Shore 98A
Temperature Range	-68°F to 140°F (-55°C to 60°C)
Working Pressure at 68°F	140 psi (9,6 Bar)
Vacuum Rating	28" HG
Safety Factor	3:1
Tariff Code	3917.33.0000

Fitting Compatibility
H-Style Compression Replacement Fitting (Page 220)

TT - 14 - 10 -BK - RS

Model	
TT	Technithane™

ID x OD (Nominal)	
316	3/16" x 5/16"
14	1/4" x 3/8"
2164	21/64" x 1/2"
38	3/8" x 9/16"
1332	13/32" x 5/8"
12	1/2" x 3/4"
8	5mm x 8mm
10	6.5mm x 10mm
12	8mm x 12mm
16	11mm x 16mm

Total Length	
10	10 ft
15	15 ft
20	20 ft
25	25 ft
2.5	2.5m
5	5m
7.5	7.5m
10	10m

Color	
BK	Black
C	Clear
CB	Clear Blue
G	Green
GY	Gray
LB	Light Blue
LG	Light Green
NB	Navy Blue
OR	Orange
R	Red
W	White
Y	Yellow

Fittings	
RS	Rigid & Swivel
RR	Rigid & Rigid
SS	Swivel & Swivel
Q	Premium Series (Auto)
E	Economy Series (Manual)
DF	Safety-Slide™
BC	Safety-Touch™

Material Availability by Color Code

Model	BK	C	CB	G	GY	LB	LG	NB	OR	R	W	Y
TT-316	•	•	X	•	X	•	X	•	X	•	•	•
TT-14	•	•	✓	•	LQ	•	X	•	X	•	•	•
TT-2164	•	•	✓	•	LQ	LQ	LQ	•	X	•	•	LQ
TT-38	X	•	✓	X	X	X	X	•	X	•	X	•
TT-1332	X	X	X	X	X	X	X	X	X	X	X	X
TT-12	X	X	✓	X	X	X	X	X	X	X	X	X
TT-8	•	•	X	•	X	•	X	•	X	•	•	•
TT-10	•	•	X	•	X	•	X	•	X	•	X	•
TT-12	•	•	X	•	X	•	LQ	•	X	•	X	•
TT-16	•	•	X	X	X	•	X	X	X	X	X	X

✓: Spirals are Available •: Available Material – Some Lead-Time for Spiraling
LQ: Limited Quantities of Material - Contact ATP X: Not-Stocked (Minimum Runs Apply) - Contact ATP
Availability is Subject to Change, Contact ATP

Technithane™ Fractional Sizes (NPT Threads)

Model (select color & fitting style)	ID	OD	Working Length	Total Length	Thread	Compressed Length	Tool Tail Length	Port Tail Length	Total Turns	Spiral OD	Stocked Assemblies
TT-316-10-_-_	0.187" (3/16")	0.312" (5/16")	8'	10'	1/4" Male NPT	31.125"	20"	4"	19	1.625"	
TT-316-15-_-_			12'	15'		35.875"			31		
TT-316-20-_-_			16'	20'		40.250"			42		
TT-316-25-_-_			20'	25'		45.000"			54		
TT-14-10-_-_	0.250" (1/4")	0.375" (3/8")	8'	10'	1/4" Male NPT	31.125"	20"	4"	14	2.002"	CB
TT-14-15-_-_			12'	15'		35.625"			23		CB
TT-14-20-_-_ (Supersedes Auto-1001-_)			16'	20'		39.750"			39		CB LB NB R Y
TT-14-25-_-_			20'	25'		44.250"			40		CB LB R Y
TT-14-30-_-_ (Formerly Auto-1002-_)			24'	30'		50.000"			69		CB BK C NB R Y
TT-2164-10-_-_	0.328" (21/64")	0.500" (1/2")	8'	10'	3/8" Male NPT	31.000"	20"	4"	12	2.681"	
TT-2164-15-_-_			12'	15'		44.000"			19		
TT-2164-20-_-_ (Supersedes Auto-1004-_)			16'	20'		31.000"			26		
TT-2164-25-_-_			20'	25'		45.000"			34		
TT-2164-30-_-_ (Formerly Auto-1005-_)			24'	30'		50.000"			52		
TT-38-10-_-_	0.375" (3/8")	0.562" (9/16")	8'	10'	3/8" Male NPT	31.000"	20"	4"	12	3.125"	CB
TT-38-15-_-_			12'	15'		36.000"			19		CB
TT-38-20-_-_ (Supersedes Auto-1007-_)			16'	20'		40.000"			26		CB C
TT-38-25-_-_			20'	25'		45.000"			34		CB LG NB R
TT-38-30-_-_ (Formerly Auto-1008-_)			24'	30'		47.000"			37		CB C NB
TT-1332-10-_-_	0.406" (13/32")	0.625" (5/8")	8'	10'	1/2" Male NPT	29.000"	20"	4"	9	4.254"	
TT-1332-15-_-_			12'	15'		32.750"			13		
TT-1332-20-_-_			16'	20'		35.875			19		
TT-1332-25-_-_			20'	25'		39.000"			24		
TT-12-15-_-_	0.500" (1/2")	0.750" (3/4")	12'	15'	1/2" Male NPT Rigid/Swivel	33.750"	20"	4"	13	4.500"	CB
TT-12-20-_-_			16'	20'		36.000"			19		CB
TT-12-25-_-_			20'	25'		42.000"			24		CB

Note: For Techniblue™ use Clear Blue (CB) Color Suffix

Auto Spiral to Technithane™ Part Number Conversion

Auto Sspiral Model (Obsolete)	Technithane™ Model (Use This Number)	ID	OD	Working Length	Total Length
Auto-1001-_-_	TT-14-20-_-_	0.250" (1/4")	0.375" (3/8")	16'	20'
Auto-1002-_-_	TT-14-30-_-_			24'	30'
Auto-1004-_-_	TT-2164-20-_-_	0.328" (21/64")	0.500" (1/2")	16'	20'
Auto-1005-_-_	TT-2164-30-_-_			24'	30'
Auto-1007-_-_	TT-38-20-_-_	0.375" (3/8")	0.562" (9/16")	16'	20'
Auto-1008-_-_	TT-38-30-_-_			24'	30'

Note: The Auto Spiral Line was Merged with Technitane™

Spiral Recoil Hose

Technithane™ Metric Sizes (BSPT Threads)

Model (select color & fitting style)	ID	OD	Working Length	Total Length	Thread	Retracted Length	Tool Tail Length	Port Tail Length	Total Turns	Spiral OD
TT-8-2.5_-_	5mm	8mm	2m	2.5m	1/4" Male BSPT	78cm	50mm	10mm	18	42mm
TT-8-5_-_			4m	5m		100cm			42	
TT-8-7.5_-_			6m	7.5m		123cm			66	
TT-8-10_-_			8m	10m		140cm			90	
TT-10-2.5_-_	6.5mm	10mm	2m	2.5m	1/4" Male BSPT	78cm	50mm	10mm	15	52mm
TT-10-5_-_			4m	5m		100cm			34	
TT-10-7.5_-_			6m	7.5m		123cm			53	
TT-10-10_-_			8m	10m		140cm			72	
TT-12-2.5_-_	8mm	12mm	2m	2.5m	3/8" Male BSPT	78cm	50mm	10mm	11	65mm
TT-12-5_-_			4m	5m		100cm			26	
TT-12-7.5_-_			6m	7.5m		119cm			41	
TT-12-10_-_			8m	10m		138cm			56	
TT-16-2.5_-_	11mm	16mm	2m	2.5m	1/2" Male BSPT	72cm	50mm	10mm	7	108mm
TT-16-5_-_			4m	5m		84cm			16	
TT-16-7.5_-_			6m	7.5m		100cm			24	
TT-16-10_-_			8m	10m		117cm			33	

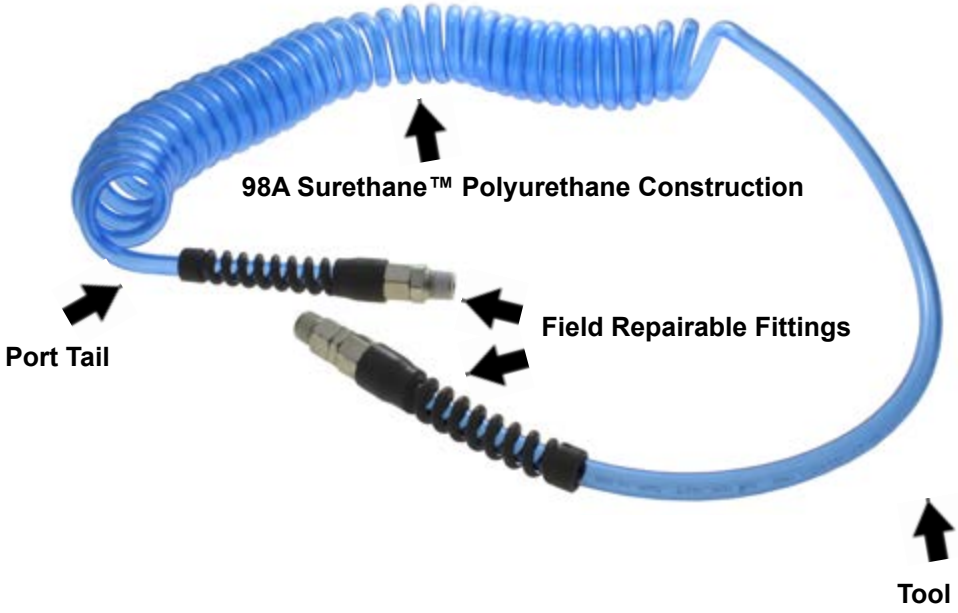

Rigid Fitting with Bend-Restrictor

Swivel Fitting with Bend-Restrictor

Technithane™ Fractional Sizes (Pneumatic Quick Disconnect Fittings)

Model (select color & fitting style)	ID	OD	Working Length	Total Length	Available QD	Body Size/ Interchange	Compressed Length	Tool Tail Length	Port Tail Length	Total Turns	Spiral OD
TT-316-10-_-_	0.187" (3/16")	0.312" (5/16")	8'	10'	Premium Series (Automatic), Economy Series (Manual), Safety-Slide™, Safety-Touch™	1/4" Industrial	31.125"	20"	4"	19	1.625"
TT-316-15-_-_			12'	15'			35.875"			31	
TT-316-20-_-_			16'	20'			40.250"			42	
TT-316-25-_-_			20'	25'			45.000"			54	
TT-14-10-_-_	0.250" (1/4")	0.375" (3/8")	8'	10'	Premium Series (Automatic), Economy Series (Manual), Safety-Slide™, Safety-Touch™	1/4" Industrial	31.125"	20"	4"	14	2.002"
TT-14-15-_-_			12'	15'			35.625"			23	
TT-14-20-_-_ (Supersedes Auto-1001-_)			16'	20'			39.750"			39	
TT-14-25-_-_			20'	25'			44.250"			40	
TT-14-30-_-_ (Formerly Auto-1002-_)			24'	30'			50.000"			69	
TT-2164-10-_-_	0.328" (21/64")	0.500" (1/2")	8'	10'	Premium Series (Automatic), Economy Series (Manual), Safety-Slide™, Safety-Touch™	3/8" Industrial	31.000"	20"	4"	12	2.681"
TT-2164-15-_-_			12'	15'			44.000"			19	
TT-2164-20-_-_ (Supersedes Auto-1004-_)			16'	20'			31.000"			26	
TT-2164-25-_-_			20'	25'			45.000"			34	
TT-2164-30-_-_			24'	30'			50.000"			52	
(Formerly Auto-1005-_)											
TT-38-10-_-_	0.375" (3/8")	0.562" (9/16")	8'	10'	Premium Series (Automatic), Economy Series (Manual), Safety-Slide™, Safety-Touch™	1/4" or 3/8" Industrial	31.000"	20"	4"	12	3.125"
TT-38-15-_-_			12'	15'			36.000"			19	
TT-38-20-_-_ (Supersedes Auto-1007-_)			16'	20'			40.000"			26	
TT-38-25-_-_			20'	25'			45.000"			34	
TT-38-30-_-_ (Formerly Auto-1008-_)			24'	30'			47.000"			37	
TT-1332-10-_-_	0.406" (13/32")	0.625" (5/8")	8'	10'	Safety-Slide™	1/2" Industrial	29.000"	20"	4"	9	4.254"
TT-1332-15-_-_			12'	15'			32.750"			13	
TT-1332-20-_-_			16'	20'			35.875			19	
TT-1332-25-_-_			20'	25'			39.000"			24	
TT-12-15-_-_	0.500" (1/2")	0.750" (3/4")	12'	15'	Safety-Slide™	1/2" Industrial	33.750"	20"	4"	13	4.500"
TT-12-20-_-_			16'	20'			36.000"			19	
TT-12-25-_-_			20'	25'			42.000"			24	

Note: These items are not assembled or stocked, additional lead time required

Available QD Suffix Codes		
Suffix	Series	Catalog Page
Q	Premium Series (Auto)	226
E	Economy Series (Manual)	235
DF	Safety-Slide™	238
BC	Safety-Touch™	241

Note: for 1/4" Body Size on a 3/8"ID hose, add "2" at the end. Example: DF2

Premium | Economy | Safety-Slide™ | Safety-Touch™

Spiral Recoil Hose

Reduced Diameter Spiral

Strong™ Spirals are manufactured with a proprietary process that allows a **reduced spiral diameter** and increased retraction strength. Additionally, the reduced spiral diameter prevents any possible tangles with other spirals. Strong™ Spirals are ideal for assembly-line applications where multiple spirals are in one work area.

- Lightweight and Abrasion-Resistant
- Excellent Coil Memory and Retraction Strength
- Virtually Kink-Proof
- Reusable Nickel-Plated Fittings with Bend-Restrictors
- Thread Sealant Supplied on all Fittings
- Low Moisture Absorption Rates

Specifications	
Material	Polyurethane (Ether-Based)
Hardness	Shore 98A
Temperature Range	-68°F to 140°F (-55°C to 60°C)
Working Pressure at 68°F	140 psi (9,6 Bar)
Vacuum Rating	28" HG
Safety Factor	3:1
Tariff Code	3917.33.0000

Fitting Compatibility
H-Style Compression Replacement Fitting (Page 220)

ST - 14 - 10 - OR - RS

Model	
ST	Strong™ Spiral

ID x OD (Nominal)	
316	3/16" x 5/16"
14	1/4" x 3/8"
2164	21/64" x 1/2"
1332	13/32" x 5/8"
8	5mm x 8mm
10	6.5mm x 10mm
12	8mm x 12mm
16	11mm x 16mm

Total Length	
10	10 ft
15	15 ft
20	20 ft
25	25 ft
2	2m
4	4m
6	6m
8	8m

Color	
BK	Black
OR	Orange
Y	Yellow
LG	Light Green
NB	Navy Blue

Fittings	
RS	Rigid & Swivel
RR	Rigid & Rigid
SS	Swivel & Swivel

Material Availability by Color Code

Model	BK	LG	NB	OR	Y
ST-316	X	X	X	X	✓
ST-14	X	X	X	X	X
ST-2164	X	X	LQ	X	X
ST-38	X	X	X	X	X
ST-1332	X	✓	✓	X	X
ST-8	✓	X	X	X	X
ST-10	X	X	X	X	X
ST-12	X	X	X	X	X
ST-16	X	X	X	X	X

✓: Stocked Material
X: Not-Stocked (Minimum Runs Apply)
LQ: Limited quantities
Availability is Subject to Change, Contact ATP

Strong™ Spiral Fractional (NPT Fittings) & Metric Sizes (BSPT Fittings)

Model (select color & fitting style)	ID	OD	Working Length	Total Length	Thread	Compressed Length	Tool Tail Length	Port Tail Length	Total Turns	Spiral OD	Available Colors	Package Weight
ST-316-10-_-_	0.1875" (3/16")	0.312" (5/16")	8'	10'	1/4" Male NPT	40.0"	20"	4"	46	1.26"	Y	0.48 lb
ST-316-15-_-_			12'	15'		51.0"			77			0.80 lb
ST-316-20-_-_			16'	20'		59.5"			107			1.13 lb
ST-316-25-_-_			20'	25'		72"			138			1.44 lb
ST-14-10-_-_	0.250" (1/4")	0.375" (3/8")	8'	10'	1/4" Male NPT	40.0"	20"	4"	38	1.62"	Non-Stock	0.61 lb
ST-14-15-_-_			12'	15'		50.0"			64			0.64 lb
ST-14-20-_-_			16'	20'		61.0"			90			0.88 lb
ST-14-25-_-_			20'	25'		71.0"			115			1.13 lb
ST-2164-10-_-_	0.328" (21/64")	0.500" (1/2")	8'	10'	3/8" Male NPT	40.5"	20"	4"	29	2.13"	NB	0.82 lb
ST-2164-15-_-_			12'	15'		51.0"			48			1.50 lb
ST-2164-20-_-_			16'	20'		62.0"			67			2.22 lb
ST-2164-25-_-_			20'	25'		73.0"			86			2.89 lb
ST-1332-10-_-_	0.406" (13/32")	0.625" (5/8")	8'	10'	1/2" Male NPT	38.0"	20"	4"	23	3.25"	LG NB	1.52 lb
ST-1332-15-_-_			12'	15'		47.0"			38			2.50 lb
ST-1332-20-_-_			16'	20'		57.0"			54			3.56 lb
ST-1332-25-_-_			20'	25'		65.0"			69			4.50 lb
ST-8-2-_-_	5mm	8mm	1.40m	2m	1/4" Male BSPT (R)	76cm	50cm	10cm	20	32mm	BK	0.25 lb
ST-8-4-_-_			2.50m	4m		99cm			49			0.51 lb
ST-8-6-_-_			3.85m	6m		125cm			81			0.84 lb
ST-8-8-_-_			5.15m	8m		151cm			114			1.19 lb
ST-10-4-_-_	6.5mm	10mm	2.35m	4m	1/4" Male BSPT (R)	95cm	50cm	10cm	35	42mm	Non-Stock	0.50 lb
ST-10-6-_-_			3.35m	6m		115cm			55			0.77 lb
ST-10-8-_-_			4.45m	8m		139cm			79			1.10 lb
ST-12-4-_-_	8mm	12mm	2.40m	4m	3/8" Male BSPT (R)	95cm	50cm	10cm	30	55mm	Non-Stock	1.00 lb
ST-12-6-_-_			3.30m	6m		114cm			45			1.50 lb
ST-12-8-_-_			4.45m	8m		137cm			64			2.22 lb
ST-16-4-_-_	11mm	16mm	2.10m	4m	1/2" Male BSPT (R)	90cm	50cm	10cm	19	83mm	Non-Stock	0.94 lb
ST-16-6-_-_			2.80m	6m		104cm			28			1.38 lb
ST-16-8-_-_			3.60m	8m		120cm			38			1.63 lb

MADE IN USA

Spiral Recoil Hose

Nylon Spiral

Nylon Spirals are a great choice for industrial environments due to their excellent coil memory and chemical resistance. Nylon is the standard for applications that require increased working pressure and abrasion-resistance, such as machining centers.

- Excellent Abrasion-Resistance
- Economical
- Low Moisture-Absorption Rate
- High Retraction-Strength
- Equipped with Swivel Fittings
- Reusable Nickel-Plated Fittings with Bend Restrictors
- Thread Sealant Supplied on all Fittings
- Available in Assemblies or Bulk

Specifications	
Material	Nylon 12 (Polyamide 12)
Hardness	Shore 70D
Temperature Range	-60°F to 200°F (-51°C to 93°C)
Working Pressure at 68°F	200 psi (13,7 Bar) 1/4" - 250 PSI (17,7 Bar) 3/8" - 240 PSI (16,5 Bar) 1/2" - 210 PSI (14,5 Bar)
Vacuum Rating	28" HG
Safety Factor	4:1
Tariff Code	3917.33.0000

Fitting Compatibility
N-Style Compression Replacement Fitting (Page 221)

NS - 14 - 12 - Y

Model	
NS	Nylon Spiral

Inside Diameter	
14	1/4"
38	3/8"
12	1/2"

Total Length	
12	12.5 ft
25	25 ft
50	50 ft

Color	
Y	Yellow
R	Red

Nylon Spiral Fractional Sizes

Model (choose color)	ID	OD	Working Length	Total Length	Thread	Compressed Length	Total Turns	Spiral OD	Package Weight
NS-14-12-_	0.250" (1/4")	0.312" (5/16")	10'	12.5'	1/4" Male NPT	4.7"	15	3.63"	0.37 lb
NS-14-25-_			20'	25'		9.5"	29		0.57 lb
NS-14-50-_			40'	50'		19.0"	58		0.94 lb
NS-14-50-_-BULK			40'	50'	No Fittings	19.0"	58		0.94 lb
NS-38-12-_02	0.375" (3/8")	0.500" (1/2")	10'	12.5'	1/4" Male NPT	4.5"	9	6.00"	0.61 lb
NS-38-25-_02			20'	25'		9.0"	18		0.93 lb
NS-38-50-_02			40'	50'		18.0"	35		1.61 lb
NS-38-12-_03			10'	12.5'	3/8" Male NPT	4.5"	9		0.61 lb
NS-38-25-_03			20'	25'		9.0"	18		0.93 lb
NS-38-50-_03			40'	50'		18.0"	35		1.61 lb
NS-38-50-_-BULK			40'	50'	No Fittings	18.0"	35		1.61 lb
NS-12-12-_	0.500" (1/2")	0.625" (5/8")	10'	12.5'	1/2" Male NPT	6.0"	6	7.00"	1.19 lb
NS-12-25-_			20'	25'		10.5"	13		1.88 lb
NS-12-50-_			40'	50'		19.5"	27		3.08 lb
NS-12-50-_-BULK			40'	50'	No Fittings	19.5"	27		3.08 lb

MADE IN USA

Dual Durometer Spiral

Strong-Plus™ Spirals are manufactured with a proprietary process that allows a reduced spiral diameter and increased retraction strength. Strong-Plus™ Spirals feature a soft, **60A 5ft Long Polyurethane Tail**, the Strong-Plus™ Spiral is ideal for fixed workspaces or assembly-line applications. The increased comfort and convenience offered by the tail combines the best traits of a straight hose and a spiral.

- Ideal for Painting and Finishing Applications
- 60A PU Ultra-Flexible Tail with a 98A Spiral
- Soft Tail Prevents Unintended Spiral Contact with Delicate Surfaces
- Excellent Coil Memory and Retraction Strength
- Virtually Kink-Proof
- Reusable Nickel-Plated Fittings with Bend-Restrictors
- Thread Sealant Supplied on All Fittings
- Excellent Option for Confined Work Areas

SP - 14 - 10 - OR - RS

Model	
SP	Strong-Plus™ Spiral

ID x OD (Nominal)	
316	3/16" x 5/16"
14	1/4" x 3/8"
2164	21/64" x 1/2"
1332	13/32" x 5/8"
8	5mm x 8mm
10	6.5mm x 10mm
12	8mm x 12mm
16	11mm x 16mm

Total Length	
10	10 ft
15	15 ft
20	20 ft
25	25 ft
2	2m
4	4m
6	6m
8	8m

Color	
OR	Orange
LG	Light Green
NB	Navy Blue

Fittings	
RS	Rigid & Swivel
RR	Rigid & Rigid
SS	Swivel & Swivel

Specifications	
Material	Polyurethane (Ether-Based)
Hardness	Shore 98A / 60A
Temperature Range	-68°F to 140°F (-55°C to 60°C)
Working Pressure at 68°F	120 psi (8,2 Bar)
Vacuum Rating	28" HG
Safety Factor	3:1
Tariff Code	3917.33.0000

Fitting Compatibility
H & SH-Style Compression Replacement Fitting (Page 220, 221)

Note: Not all sizes available in all colors. Please check for availability.

Material Availability by Color Code			
Model	LG	NB	OR
SP-14	X	X	X
SP-2164	X	LQ	X
SP-1332	✓	✓	X
SP-10	X	X	X
SP-12	X	X	X

✓: Stocked Material
X: Not-Stocked (Minimum Runs Apply)
LQ: Limited quantities
Availability is Subject to Change, Contact ATP

Strong-Plus™ Spiral Fractional (NPT Threads) & Metric Sizes (BSPT Threads)

Model (select color & fitting style)	ID	OD	Working Length	Thread	Compressed Length	Tool Tail Length	Port Tail Length	Total Turns	Spiral OD	Available Colors	Package Weight
SP-14-10-_-_	0.250" (1/4")	0.375" (3/8")	8'	1/4" Male NPT	74.0"	64"	4"	15	1.62"	Non-Stock	0.69 lb
SP-14-15-_-_			12'		83.5"			41			0.90 lb
SP-14-20-_-_			16'		93.0"			66			1.13 lb
SP-14-25-_-_			20'		103.0"			92			1.32 lb
SP-2164-10-_-_	0.328" (21/64")	0.500" (1/2")	8'	3/8" Male NPT	74.0"	64"	4"	11	2.13"	NB	1.11 lb
SP-2164-15-_-_			12'		83.0"			30			1.27 lb
SP-2164-20-_-_			16'		93.0"			50			1.71 lb
SP-2164-25-_-_			20'		102.5"			69			2.14 lb
SP-1332-10-_-_	0.406" (13/32")	0.625" (5/8")	8'	1/2" Male NPT	74.0"	64"	4"	9	3.25"	LG NB	1.75 lb
SP-1332-15-_-_			12'		83.0"			24			1.99 lb
SP-1332-20-_-_			16'		93.0"			40			2.23 lb
SP-1332-25-_-_			20'		102.5"			55			2.46 lb
SP-10-2-_-_	6.5mm	10mm	2.2m	1/4" Male BSPT (R)	140cm	160cm	10cm	20	40mm	Non-Stock	0.75 lb
SP-10-4-_-_			3.2m		160cm			40			0.90 lb
SP-10-6-_-_			4.2m		180cm			60			1.00 lb
SP-10-8-_-_			5.2m		200cm			80			1.19 lb
SP-12-2-_-_	8mm	12mm	2.4m	3/8" Male BSPT (R)	144cm	160cm	10cm	20	50mm	Non-Stock	2.00 lb
SP-12-4-_-_			3.6m		168cm			40			3.00 lb
SP-12-6-_-_			4.8m		192cm			60			3.38 lb
SP-12-8-_-_			6.0m		216cm			80			4.50 lb

Spiral Recoil Hose

Armorthane™ Spiral

Armorthane™ Spiral hoses feature a sturdy weave of braided reinforcement between the inner and outer layers, increasing durability and working pressure. The reduced diameter of the spiral enables higher retraction strength, preventing tangles often associated with other hoses.

- UV-Stabilized
- Excellent Abrasion-Resistance
- Increased Working Pressure
- Reusable Nickel-Plated Fittings with Bend Restrictors
- Thread Sealant Supplied on all Fittings
- Available with Threads of Pneumatic QD Fittings
- Custom Assemblies Available – Contact ATP

Specifications	
Material	Polyurethane (Ether-Based)
Hardness	Shore 98A
Color	Clear Blue
Temperature Range	-40°F to 120°F (-40°C to 49°C)
Working Pressure at 68°F	310 psi (21,3 Bar)
Vacuum Rating	28" HG
Safety Factor	3:1
Tariff Code	3917.33.0000

Fitting Compatibility
H-Style Compression Replacement Fitting (Page 220)

AT - 14 - 10 - CB - RS

Model	
AT	Armorethane™

Inside Diameter (Mominal)	
14	1/4"
38	3/8"
12	1/2"

Total Length	
10	10 ft
15	15 ft
20	20 ft
25	25 ft
30	30 ft
35	35 ft

Color	
CB	Clear Blue

Fittings	
RS	Rigid & Swivel
Q	Premium Series (Auto)
E	Economy (Manual)
DF	Safety-Slide™
BC	Safety-Touch™

Armorthane™ Fractional Sizes (NPT Fittings)

Model	ID	OD	Working Length	Total Length	Thread	Compressed Length	Tool Tail Length	Port Tail Length	Total Turns	Spiral OD	Package Weight
AT-14-10-CB-RS	0.250" (1/4")	0.375" (3/8")	8'	10'	1/4" Male NPT Rigid / Swivel	35.2"	20"	4"	30	1.63"	0.50 lb
AT-14-15-CB-RS			12'	15'		41.2"			46		0.75 lb
AT-14-20-CB-RS			16'	20'		47.7"			63		1.00 lb
AT-14-25-CB-RS			20'	25'		54.7"			82		1.25 lb
AT-14-30-CB-RS			24'	30'		60.7"			98		1.50 lb
AT-38-10-CB-RS	0.375" (3/8")	0.562" (9/16")	8'	10'	3/8" Male NPT Rigid / Swivel	31.0"	20"	4"	14	2.38"	1.20 lb
AT-38-15-CB-RS			12'	15'		42.0"			32		1.31 lb
AT-38-20-CB-RS			16'	20'		49.5"			45		1.75 lb
AT-38-25-CB-RS			20'	25'		56.7"			58		2.19 lb
AT-38-30-CB-RS			24'	30'		63.0"			69		2.63 lb
AT-38-35-CB-RS			28'	35'		70.7"			83		3.06 lb
AT-12-15-CB-RS	0.500" (1/2")	0.750" (3/4")	12'	15'	1/2" Male NPT Rigid / Swivel	40.5"	20"	4"	22	4.50"	2.06 lb
AT-12-20-CB-RS			16'	20'		46.5"			30		2.75 lb
AT-12-25-CB-RS			20'	25'		53.2"			39		3.44 lb
AT-12-30-CB-RS			24'	30'		58.5"			46		4.13 lb

Spiral Recoil Hose

Armorthane™ Fractional Sizes with Pneumatics Quick Disconnects

Model (choose fitting)	ID	OD	Working Length	Total Length	Available QD	Body Size/ Interchange	Retracted Length	Tool Tail Length	Port Tail Length	Total Turns	Spiral OD
AT-14-10-CB-_	0.250" (1/4")	0.375" (3/8")	8'	10'	Premium Series (Automatic), Economy Series (Manual), Safety-Slide™, Safety-Touch™	1/4" Industrial	35.25"	20"	4"	30	1.625"
AT-14-15-CB-_			12'	15'			41.25"			46	
AT-14-20-CB-_			16'	20'			47.75"			63	
AT-14-25-CB-_			20'	25'			54.75"			82	
AT-14-30-CB-_			24'	30'			60.75"			98	
AT-38-10-CB-_	0.375" (3/8")	0.562" (9/16")	8'	10'	Premium Series (Automatic), Economy Series (Manual), Safety-Slide™, Safety-Touch™	1/4" or 3/8" Industrial	31.00"	20"	4"	14	2.375"
AT-38-15-CB-_			12'	15'			42.00"			32	
AT-38-20-CB-_			16'	20'			49.50"			45	
AT-38-25-CB-_			20'	25'			56.75"			58	
AT-38-30-CB-_			24'	30'			63.00"			69	
AT-38-35-CB-_			28'	35'			70.75"			83	
AT-12-15-CB-_	0.500" (1/2")	0.750" (3/4")	12'	15'	Safety-Slide™	1/2" Industrial	40.50"	20"	4"	22	4.500"
AT-12-20-CB-_			16'	20'			46.50"			30	
AT-12-25-CB-_			20'	25'			53.25"			39	
AT-12-30-CB-_			24'	30'			58.50"			46	

Available QD Suffix Codes		
Suffix	Series	Catalog Page
Q	Premium Series (Auto)	226
E	Economy Series (Manual)	235
DF	Safety-Slide™	238
BC	Safety-Touch™	241

Note: for 1/4" Body Size on a 3/8"ID hose, add "2" at the end. Example: DF2

Premium

Economy

Safety-Slide™

Safety-Touch™

Single Tube NSF 51® Polyurethane Spirals

TechniSpiral™

ATP's Polyurethane TechniSpiral™ is constructed of NSF 51® Certified Surethane™ Tubing. Constructed of ether-based resin, Polyurethane TechniSpirals resist hydrolysis brought on by humidity and contact with moisture.

- Resists Kinking
- Excellent Coil Memory
- Wide Variety of Sizes and Colors

1 PS - 532 - 05 - BK

1	TechniSpiral™

Material	
PS	98A PU

Tubing OD	
04M/532	4mm/ 5/32"
14	1/4"
38	3/8"
12	1/2"
06M	6mm
08M/516	8mm/5/16"
10M	10mm
12M	12mm

Number of Turns	
05	5
10	10
15	15
20	20
30	30
40	40

Color	
BK	Black
C	Clear
CB	Clear Blue
CG	Clear Green
CR	Clear Red
G	Green
GY	Gray
LB	Light Blue
LG	Light Green
NB	Navy Blue
OR	Orange
R	Red
W	White
Y	Yellow

Specifications	
Temperature Range	-40°F to 160°F*
Vacuum Rating	28" HG
Tolerance (1/8" to 1/2")	+/- .005"
Hardness	Shore 98A
Safety Factor	3:1
Material	PU (Polyurethane)
Pressure Range	See Charts
Media	Gases & Liquids
Tariff Code	3917.32.0000

*Note: Green, Clear Green, Yellow, -40°F to 150°F

Certifications/Compliance
ROHS Compliant
NSF 51® Certified
Meets NSF 61® Requirements

Fitting Compatibility
Technifit™ Push to Connect (Page 52 - 173)
Compression
Hose-Barb (Page 251)

Material Availability by Color Code

Model	BK	C	CB	CG	CR	G	GY	LB	LG	NB	OR	R	W	Y
1PS-04M/532	✓	✓	✓	X	X	✓	X	✓	X	✓	X	✓	X	✓
1PS-14	✓	✓	✓	X	X	✓	✓	✓	X	✓	X	✓	✓	✓
1PS-08M/516	✓	✓	✓	X	X	✓	X	✓	X	✓	X	✓	✓	✓
1PS-38	✓	✓	✓	X	✓	✓	LQ	✓	X	✓	X	✓	✓	✓
1PS-12	✓	✓	✓	X	X	LQ	LQ	LQ	LQ	✓	X	✓	✓	LQ
1PS-06M	✓	✓	✓	X	X	✓	X	✓	X	✓	X	✓	X	✓
1PS-10M	✓	✓	✓	X	X	✓	X	✓	X	✓	X	✓	X	✓
1PS-12M	✓	✓	✓	X	X	✓	X	✓	X	✓	X	✓	X	✓

✓: Available Material – Ready to Spiral X: Not-Stocked (Minimum Runs Apply) – Contact ATP
LQ = Limited Material Quantities, Contact ATP
Availability is Subject to Change, Contact ATP

Note: See Back Cover or Website for Chemical Compatibility

MADE IN USA

Spiral Recoil Hose

Fractional Sizes

Model (choose color)	O.D.	I.D.	Total Turns	Working Length	Retracted Length	Tail Length	Working Pressure at 75°F	Spiral O.D.	Package Weight
1PS-04M/532-05-_	0.156" (5/32")	0.093"	5	1.20'	8.75"	4" & 4"	200 psi	0.875"	0.01 lb
1PS-04M/532-10-_			10	2.00'	9.50"				0.02 lb
1PS-04M/532-15-_			15	2.70'	10.25"				0.03 lb
1PS-04M/532-20-_			20	3.50'	11.10"				0.33 lb
1PS-04M/532-30-_			30	5.40'	12.87"				0.40 lb
1PS-04M/532-40-_			40	6.50'	14.31"				0.50 lb
1PS-14-05-_	0.250" (1/4")	0.156" (5/32")	5	1.70'	9.25"	4" & 4"	180 psi	1.500"	0.03 lb
1PS-14-10-_			10	2.90'	10.50"				0.06 lb
1PS-14-15-_			15	4.00'	11.75'				0.08 lb
1PS-14-20-_			20	5.30'	13.00"				0.12 lb
1PS-14-30-_			30	7.60'	15.50"				0.16 lb
1PS-14-40-_			40	10.00'	18.00"				0.22 lb
1PS-08M/516-05-_	0.313" (5/16")	0.187" (3/16")	5	1.74'	9.50"	4" & 4"	175 psi	1.610"	0.06 lb
1PS-08M/516-10-_			10	2.99'	11.00"				0.10 lb
1PS-08M/516-15-_			15	4.27'	12.62"				0.20 lb
1PS-08M/516-20-_			20	5.51"	14.25"				0.20 lb
1PS-08M/516-30-_			30	7.97'	17.37"				0.33 lb
1PS-08M/516-40-_			40	10.50'	20.50"				0.44 lb
1PS-38-05-_	0.375" (3/8")	0.250" (1/4")	5	2.00'	9.87"	4" & 4"	150 psi	2.000"	0.09 lb
1PS-38-10-_			10	3.60'	11.75"				0.16 lb
1PS-38-15-_			15	5.20'	16.62"				0.23 lb
1PS-38-20-_			20	6.70'	15.50"				0.29 lb
1PS-38-30-_			30	9.80'	19.25"				0.41 lb
1PS-38-40-_			40	12.90'	23.00"				0.60 lb
1PS-12-05-_	0.500" (1/2")	0.325"	5	2.60'	10.50"	4" & 4"	150 psi	2.625"	0.22 lb
1PS-12-10-_			10	4.70'	13.00"				0.40 lb
1PS-12-15-_			15	6.70'	15.50"				0.60 lb
1PS-12-20-_			20	8.70'	18.00"				0.80 lb
1PS-12-30-_			30	12.90'	23.00"				1.08 lb
1PS-12-40-_			40	17.00'	28.00"				1.60 lb

Metric Sizes

Model (choose color)	O.D.	I.D.	Total Turns	Working Length	Retracted Length	Tail Length	Working Pressure at 75°F	Spiral O.D.	Package Weight
1PS-04M/532-05-_	4mm	2.4mm	5	37cm	22cm	100mm & 100mm	200 psi (13,7 Bar)	24mm	0.01 lb
1PS-04M/532-10-_			10	60cm	24cm				0.02 lb
1PS-04M/532-15-_			15	82cm	26cm				0.02 lb
1PS-04M/532-20-_			20	105cm	28cm				0.03 lb
1PS-04M/532-30-_			30	151cm	32cm				0.04 lb
1PS-04M/532-40-_			40	197cm	36cm				0.06 lb
1PS-06M-05-_	6mm	4mm	5	51cm	23cm	100mm & 100mm	180 psi (12,4 Bar)	37mm	0.03 lb
1PS-06M-10-_			10	86cm	26cm				0.05 lb
1PS-06M-15-_			15	123cm	29cm				0.08 lb
1PS-06M-20-_			20	160cm	32cm				0.10 lb
1PS-06M-30-_			30	230cm	38cm				0.12 lb
1PS-06M-40-_			40	302cm	44cm				0.30 lb
1PS-08M/516-05-_	8mm	4.7mm	5	53cm	24cm	100mm & 100mm	175 psi (12 Bar)	41mm	0.06 lb
1PS-08M/516-10-_			10	91cm	28cm				0.10 lb
1PS-08M/516-15-_			15	130cm	32cm				0.20 lb
1PS-08M/516-20-_			20	168cm	36cm				0.20 lb
1PS-08M/516-30-_			30	243cm	44cm				0.30 lb
1PS-08M/516-40-_			40	320cm	52cm				0.40 lb
1PS-10M-05-_	10mm	6.5mm	5	62cm	25cm	100mm & 100mm	150 psi (10,3 Bar)	52mm	0.11 lb
1PS-10M-10-_			10	110cm	30cm				0.16 lb
1PS-10M-15-_			15	160cm	35cm				0.24 lb
1PS-10M-20-_			20	205cm	40cm				0.32 lb
1PS-10M-30-_			30	301cm	50cm				0.40 lb
1PS-10M-40-_			40	396cm	60cm				0.60 lb
1PS-12M-05-_	12mm	8mm	5	78cm	26cm	100mm & 100mm	150 psi (10,3 Bar)	66mm	0.19 lb
1PS-12M-10-_			10	138cm	32cm				0.31 lb
1PS-12M-15-_			15	200cm	38cm				0.42 lb
1PS-12M-20-_			20	262cm	44cm				0.62 lb
1PS-12M-30-_			30	387cm	56cm				0.83 lb
1PS-12M-40-_			40	512cm	68cm				1.12 lb

Spiral Recoil Hose

Single Tube Nylon Spirals

TechniSpiral™

ATP's Nylon TechniSpiral™ is constructed of Nylon 12 tubing. Like Nylochem® Tubing, these spirals are well suited for applications that require increased working pressures and temperatures.

- Thinner Wall Enables Higher Flow Rates
- Superior Moisture Absorbsion Rates
- Broad Chemical Resistance
- UV-Stabilized, Ideal for Outdoor Use

1 N - 532 - 05 - BK

1	TechniSpiral™

Material	
N	Nylon 12 (PA)

Tubing OD	
04M/532	4mm / 5/32"
14	1/4"
08M/516	8mm / 5/16"
38	3/8"
12	1/2"
58	5/8"
06M	6mm
10M	10mm
12M	12mm

Number of Turns	
05	5
10	10
15	15
20	20
30	30
40	40

Color	
BK	Black
NB	Navy Blue
G	Green
GY	Gray
NA	Natural
OR	Orange
R	Red
S	Silver
Y	Yellow

Specifications	
Temperature Range	-60°F to 200°F*
Vacuum Rating	28" HG
Tolerance (1/8" to 1/4")	+/- .005"
Tolerance (3/8" to 1/2")	+/- .006"
Hardness	Shore 70D/Rockwell 78R
Safety Factor	4:1
Material	Nylon 12 (Polyamide 12)
Pressure Range	See Charts
Media	Gases & Liquids
Tariff Code	3917.32.0000

Fitting Compatibility
Technifit™ Push to Connect (Page 52 - 173)
Compression

Material Availability by Color Code

Model	BK	NB	G	GY	NA	OR	R	S	Y
1N-04M/532	✓	✓	✓	x	✓	x	✓	x	✓
1N14	✓	✓	✓	x	✓	✓	✓	x	✓
1N-08M/516	✓	✓	x	x	✓	x	✓	x	x
1N38	✓	✓	✓	x	✓	x	✓	x	✓
1N12	✓	✓	x	x	✓	x	✓	x	x
1N58	x	x	x	x	x	x	x	x	✓
1N06M	✓	✓	✓	x	✓	x	✓	x	✓
1N10M	✓	✓	x	x	✓	x	x	x	x
1N12M	✓	✓	x	x	✓	x	x	x	x

✓: Stocked Material x: Not-Stocked (Minimum Runs Apply)
Availability is Subject to Change, Contact ATP

Note: See Back Cover or Website for Chemical Compatibility

MADE IN USA

Fractional Sizes

Model (choose color)	O.D.	I.D.	Total Turns	Working Length	Retracted Length	Tail Length	Working Pressure at 75°F	Spiral O.D.	Package Weight
1N-04M/532-05-_	0.156" (5/32")	0.106"	5	1.20'	9.500"	4" & 4"	350 psi	0.875"	0.01 lb
1N-04M/532-10-_			10	2.00'	11.125"				0.01 lb
1N-04M/532-15-_			15	2.70'	12.625"				0.02 lb
1N-04M/532-20-_			20	3.50'	14.250"				0.02 lb
1N-04M/532-30-_			30	5.40'	17.500"				0.03 lb
1N-04M/532-40-_			40	6.50'	20.625"				0.05 lb
1N-14-05-_	0.250" (1/4")	0.180"	5	1.70'	10.500"	4" & 4"	290 psi	1.62"	0.02 lb
1N-14-10-_			10	2.90'	13.000"				0.04 lb
1N-14-15-_			15	4.00'	15.500"				0.06 lb
1N-14-20-_			20	5.30'	18.000"				0.08 lb
1N-14-30-_			30	7.60'	23.000"				0.11 lb
1N-14-40-_			40	10.00'	28.000"				0.15 lb
1N-08M/516-05-_	0.313" (5/16")	0.236	5	2.6'	9.4"	4" & 4"	250 psi	1.88"	0.04 lb
1N-08M/516-10-_			10	3.8'	11.0"				0.07 lb
1N-08M/516-15-_			15	5.4'	12.5"				0.10 lb
1N-08M/516-20-_			20	7.0'	14.1"				0.13 lb
1N-08M/516-30-_			30	10.3'	17.3"				0.19 lb
1N-08M/516-40-_			40	13.6'	20.4"				0.25 lb
1N-38-05-_	0.375" (3/8")	0.275"	5	2.00'	11.750"	4" & 4"	250 psi	2.41"	0.07 lb
1N-38-10-_			10	3.60'	15.500'				0.13 lb
1N-38-15-_			15	5.20'	19.250"				0.19 lb
1N-38-20-_			20	6.70'	23.000"				0.25 lb
1N-38-30-_			30	9.80'	30.500"				0.37 lb
1N-38-40-_			40	12.90'	38.000"				0.49 lb
1N-12-05-_	0.500" (1/2")	0.325" (3/8")	5	2.60'	13.000"	4" & 4"	240 psi	3.00"	0.15 lb
1N-12-10-_			10	4.70'	18.000"				0.27 lb
1N-12-15-_			15	6.70'	23.000"				0.39 lb
1N-12-20-_			20	8.770'	28.000"				0.52 lb
1N-12-30-_			30	12.90'	38.000"				0.77 lb
1N-12-40-_			40	17.00'	48.000"				1.01 lb

MADE IN USA

Spiral Recoil Hose

Metric Sizes

Model (choose color)	O.D.	I.D.	Total Turns	Working Length	Retracted Length	Tail Length	Working Pressure at 75°F	Spiral O.D.	Package Weight
1N-04M/532-05-_	4mm	2.7mm	5	52cm	22cm	100mm & 100mm	350 psi (24,1 Bar)	24mm	0.01 lb
1N-04M/532-10-_			10	89cm	24cm				0.01 lb
1N-04M/532-15-_			15	126cm	26cm				0.02 lb
1N-04M/532-20-_			20	163cm	28cm				0.02 lb
1N-04M/532-30-_			30	237cm	32cm				0.03 lb
1N-04M/532-40-_			40	311cm	36cm				0.05 lb
1N-06M-05-_	6mm	4mm	5	59cm	23cm	100mm & 100mm	340 psi (23,4 Bar)	37mm	0.02 lb
1N-06M-10-_			10	103cm	26cm				0.04 lb
1N-06M-15-_			15	146cm	29cm				0.06 lb
1N-06M-20-_			20	190cm	32cm				0.07 lb
1N-06M-30-_			30	277cm	38cm				0.11 lb
1N-06M-40-_			40	364cm	44cm				0.14 lb
1N-08M/516-05-_	8mm	6mm	5	65cm	24cm	100mm & 100mm	250 psi (17,2 Bar)	41.4mm	0.04 lb
1N-08M/516-10-_			10	115cm	28cm				0.07 lb
1N-08M/516-15-_			15	165cm	32cm				0.10 lb
1N-08M/516-20-_			20	215cm	36cm				0.13 lb
1N-08M/516-30-_			30	315cm	44cm				0.19 lb
1N-08M/516-40-_			40	415cm	52cm				0.25 lb
1N-10M-05-_	10mm	8mm	5	81cm	25cm	100mm & 100mm	225 psi (15,5 Bar)	52mm	0.03 lb
1N-10M-10-_			10	147cm	30cm				0.06 lb
1N-10M-15-_			15	213cm	35cm				0.08 lb
1N-10M-20-_			20	278cm	40cm				0.11 lb
1N-10M-30-_			30	410cm	50cm				0.16 lb
1N-10M-40-_			40	541cm	60cm				0.22 lb
1N-12M-05-_	12mm	10mm	5	94cm	26cm	100mm & 100mm	200 psi (13,7 Bar)	66mm	0.11 lb
1N-12M-10-_			10	173cm	32cm				0.21 lb
1N-12M-15-_			15	256cm	38cm				0.31 lb
1N-12M-20-_			20	331cm	44cm				0.40 lb
1N-12M-30-_			30	489cm	56cm				0.60 lb
1N-12M-40-_			40	647cm	68cm				0.79 lb

Custom Assemblies

Advanced Technology Products can provide custom assemblies for specialized situations. The following services are available:

Custom Tubing Sizes
Custom Spiral Hose Assemblies
Custom Straight Hose Assemblies
Custom Bonded Straight and Spiral Assemblies

Download and submit your Custom Quotation Request at the following web address:

http://www.atp4pneumatics.com/request-quoteinfo/

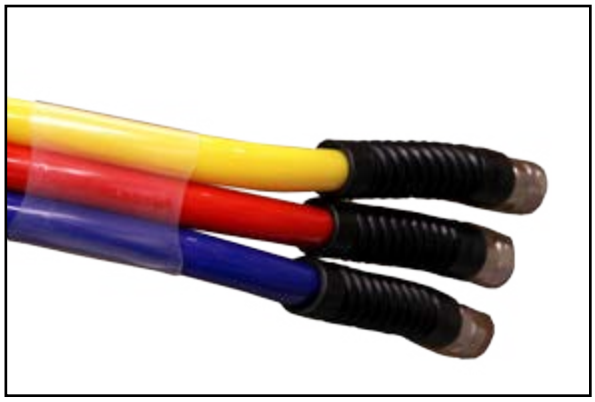

Custom Bonded Polyurethane Tubing or Spiral RFQ Form

Style (Check One)
Bonded Straight Tubing ☐
Bonded Spiral Tubing ☐

Configuration (Check One)
☐ ☐ ☐
Ribbon Pyramid Stacked

Total Units Required (Fill Out)
Units ☐
Feet ☐
Meters ☐
Total #

Tubing Information (Fill Out)

Tube #	1	2	3	4	5	6	7	8	9	10
O.D.										
Color										
Electric *	☐	☐	☐	☐	☐	☐	☐	☐	☐	☐

***Note:** 23 AWG 6 Conductor Stranded Wire is available. Check the Box where each wire will be installed.

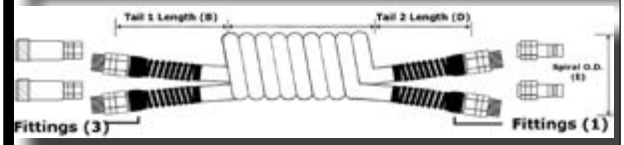

Spiral Specs (Specify Unit of Measure)
Working Length
Tail 1 Length (B)
Tail 2 Length (D)
Spiral O.D. (E)

Packaging Style (Check One)
Shrink Wrapped (Spirals and Tubing) ☐
Spool (Tubing Only) ☐
Bulk Boxed (Spirals and Tubing) ☐

Roll Size (Tubing Only)
25 ft ☐ 250 ft ☐ 25m ☐
50 ft ☐ 500 ft ☐ 100m ☐
100 ft ☐ 1,000 ft ☐
Other

Fittings (Check or Specify)
No ☐ Yes

Pneumatic Couplings (Check or Specify)
No ☐ Yes

Notes

Replacement Hose Fittings

ATP's Entire Line of Hose is Equipped with Field Repairable, Reusable Fittings

Installation Procedure:

Installation of any replacement hose fitting is accomplished in 3 steps:

Step 1:

Cut the hose to the desired length. A square and clean cut can be accomplished with a hose or tubing cutter. Slide the bend restrictor onto the Hose.

Step 2:

Lubricate the barb fitting and insert into hose with steady, even pressure.

Step 3:

Tighten the bend restrictor/nut assembly onto the barb fitting.

Fittings Use by Hose Series

Fitting Series	Nylon	Technithane	Tecniblue	Strong Spiral	Strong-Plus	Armorthane	Armor-Air	Striper	Soft PU
H	✗	✓	✓	✓	✓	✓	✓	✗	✗
SH	✗	✗	✗	✗	✓	✗	✗	✗	✓
STH	✗	✗	✗	✗	✗	✗	✗	✓	✗
N	✓	✗	✗	✗	✗	✗	✗	✗	✗

Replacement Hose Fittings

“H” Series

Model	Hose I.D. (Nominal)	Style	Thread
H14-1MSBR	1/4”	Rigid	1/8” Male NPT
H14-1MUSBR		Swivel	1/8” Male NPT
H14-2MSBR		Rigid	1/4” Male NPT
H14-2MUSBR		Swivel	1/4” Male NPT
H14-3MSBR		Rigid	3/8” Male NPT
H14-3MUSBR		Swivel	3/8” Male NPT
H2164-2MUSBR	21/64”	Swivel	1/4” Male NPT
H2164-3FSBR		Rigid	3/8” Female NPT
H2164-3FUSBR		Swivel	3/8” Female NPT
H2164-3MSBR		Rigid	3/8” Male NPT
H2164-3MUSBR		Swivel	3/8” Male NPT
H38-2MSBR	3/8”	Rigid	1/4” Male NPT
H38-2MUSBR		Swivel	1/4” Male NPT
H38-3FSBR		Rigid	3/8” Female NPT
H38-3MSBR		Rigid	3/8” Male NPT
H38-3MUSBR		Swivel	3/8” Male NPT
H38-4FSBR		Rigid	1/2” Female NPT
H1332-3MUSBR	13/32”	Swivel	3/8” Male NPT
H1332-4FSBR		Rigid	1/2” Female NPT
H1332-4MSBR		Rigid	1/2” Male NPT
H1332-4MUSBR		Swivel	1/2” Male NPT
H12-4FSBR	1/2”	Rigid	1/2” Female NPT
H12-4MSBR		Rigid	1/2” Male NPT
H12-4MUSBR		Swivel	1/2” Male NPT
H5-2MSBR	5mm	Rigid	1/4” Male NPT
H5-2MUSBR		Swivel	1/4” Male NPT
H6.5-2MSBR	6.5mm	Rigid	1/4” Male NPT
H6.5-2MUSBR		Swivel	1/4” Male NPT
H8-2MSBR	8mm	Rigid	1/4” Male NPT
H8-3FSBR		Rigid	3/8” Female NPT
H8-3MSBR		Rigid	3/8” Male NPT
H8-3MUSBR		Swivel	3/8” Male NPT
H11-3MSBR	11mm	Rigid	3/8” Male NPT
H11-4MSBR		Rigid	1/2” Male NPT
H11-4MUSBR		Swivel	1/2” Male NPT

Replacement Hose Fittings

“SH” Series

Model	Hose I.D. (Nominal)	Style	Thread
SH-6.5-N2M-SBR	6.5mm (1/4”)	Rigid	1/4” Male NPT
SH-6.5-N3M-SBR			3/8” Male NPT
SH-8-N2M-SBR	8mm (5/16”)		1/4” Male NPT
SH-8-N3M-SBR			3/8” Male NPT
SH-11-N3M-SBR	11mm (7/16”)		3/8” Male NPT
SH-11-N4M-SBR			1/2” Male NPT

“STH” Series

Model	Hose I.D. (Nominal)	Style	Thread
STH14-2MSBR	1/4”	Rigid	1/4” Male NPT
STH38-2MSBR	3/8”		1/4” Male NPT
STH38-3MSBR			3/8” Male NPT
STH12-3MSBR	1/2”		3/8” Male NPT
STH12-4MSBR			1/2” Male NPT

“N” Series

Model	Hose I.D. (Nominal)	Style	Thread
N14-2MU	1/4”	Swivel	1/4” Male NPT
N38-2MU	3/8”	Swivel	1/4” Male NPT
N38-3MU			3/8” Male NPT
N38-4MU			1/2” Male NPT
N12-4MU	1/2”	Swivel	1/2” Male NPT
N14-SPRING	1/4”	Spring	N/A
N38-SPRING	3/8”		
N12-SPRING	1/2”		

Pneumatic Quick Disconnect Couplings

General Coupling Information

Manual Coupling Operation

Manual Coupling connections are made by pulling back the locking sleeve, inserting the plug, and releasing the sleeve.

ATP's Manual couplings are identified by their flush center bore.

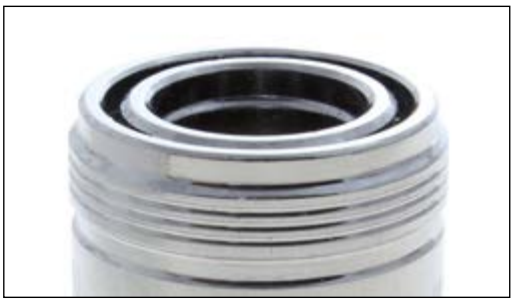

Automatic Coupling Operation

Automatic Coupling connections are made by simply inserting the plug.

ATP's Automatic couplings are identified by the protruding center bore.

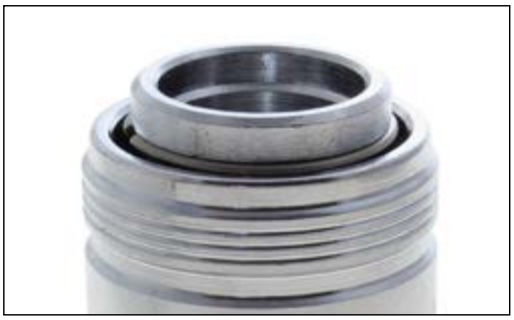

Pneumatic Quick Disconnect Coupling Specifications

Series	Body Material	Working Pressure	Temperature Range	Media	Number of Pawls (Balls)	Seal Material
Premium Chrome-Plated	Chrome-Plated Steel	150 psi	32°F - 150°F	Compressed Air	6	NBR (Buna-N)
Stainless Steel	303 Stainless Steel	300 psi	32°F - 150°F	Gases & Liquid	6	Viton®
Economy Zinc-Plated	Zinc-Plated Steel	150 psi	32°F - 150°F	Compressed Air	4	NBR (Buna-N)
Free-Angle® Plugs	Chrome-Plated Steel	145 psi	23°F - 140°F	Compressed Air	N/A	N/A
Safety-Slide™	Chrome-Plated Steel	20 – 210 psi	23°F - 140°F	Compressed Air	N/A	NBR (Buna-N)
Safety-Touch™	Chrome-Plated Steel	20 – 140 psi	20°F - 140°F	Compressed Air	6	NBR (Buna-N)
Safety-Twist™	Chrome-Plated Steel	215 psi	20°F - 140°F	Compressed Air	6	NBR (Buna-N)

Pneumatic Quick Disconnect Couplings

Chrome-Plated Premium Series

ATP's Premium Series Quick Disconnects are precision machined, chrome-plated steel.

- Chrome-Plating Resists Corrosion, Easily Cleaned of Paint or Grease
- Rugged Steel Construction Maintains Integrity, not Easily Damaged like Brass
- Precision Machining Ensures Long Lasting, Leak-Free Connection.

Specifications	
Body Material	Chrome-Plated Steel
Maximum Working Pressure	150 psi
Temperature Range	32°F-150°F
Media	Compressed Air
Number of Pawls (Balls)	6
Seal Material	NBR (Buna-N)

14 SIC - N3F

Body Size/Interchange	
14	1/4" Industrial
38	3/8" Industrial
5	1/4" Universal
HF	1/4" European/ High Flow

Style	
S	Socket / Coupling
P	Plug
I	Manual/Industrial (US)
O	Automatic
C	Chrome-Plated

Threads	
N	NPT
(Blank)	BSPT
1	1/8"
2	1/4"
3	3/8"
4	1/2"
M	Male Thread
F	Female Thread
B	Hose Barb
C	Compression

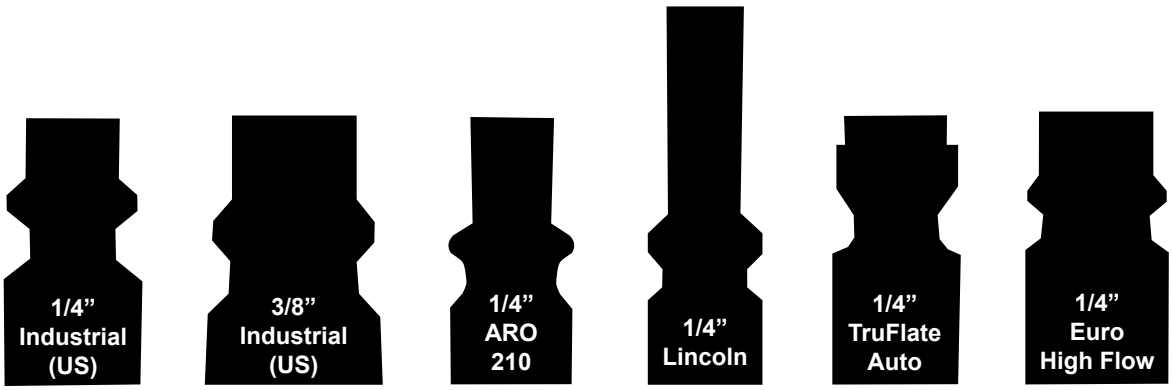

Pneumatic Quick Disconnect Couplings

Chrome-Plated Manual Couplings

ATP's Premium Series Quick Disconnects are precision machined, chrome-plated steel. These manual couplers connect with the plug by pulling back on the sleeve, and pushing both units together

- Chrome-Plating Resists Corrosion, Easily Cleaned of Paint or Grease
- Steel Construction Maintains Integrity, not Easily Damaged like Brass
- Precision Machining Ensures Long Lasting, Leak-Free Connection.
- 6 Retaining Balls Prolongs Seal life

Specifications	
Body Material	Chrome-Plated Steel
Maximum Working Pressure	150 psi
Temperature Range	32°F-150°F
Media	Compressed Air
Number of Pawls (Balls)	6
Seal Material	NBR (Buna-N)

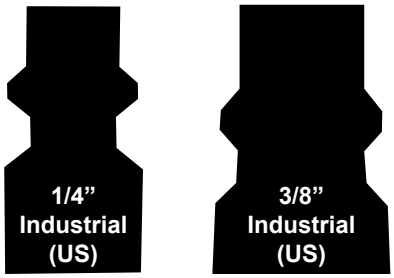

Chrome-Plated Manual Couplings

Model	Thread	Interchange	Body Size	Hex	Length	O.D.
14SIC-N2F	1/4" Female NPT	Industrial	1/4"	17mm	1.81"	0.82"
14SIC-N2M	1/4" Male NPT				1.83"	
14SIC-2B	1/4" Hose Barb				2.30"	
14SIC-H14	1/4" x 3/8" Compression				2.08"	
14SIC-N3F	3/8" Female NPT	Industrial	1/4"	21mm	1.87"	0.82"
14SIC-N3M	3/8" Male NPT			17mm		
14SIC-3B	3/8" Hose Barb				2.38"	
38SIC-N2F	1/4" Female NPT	Industrial	3/8"	19mm	1.81"	0.94"
38SIC-N2M	1/4" Male NPT				1.94"	
38SIC-2B	1/4" Hose Barb				2.40"	
38SIC-H14	1/4" x 3/8" Compression			16mm	2.14"	
38SIC-N3F	3/8" Female NPT	Industrial	3/8"	21mm	1.92"	0.94"
38SIC-N3M	3/8" Male NPT			19mm	1.98"	
38SIC-3B	3/8" Hose Barb				2.48"	
38SIC-H38	3/8" x 9/16" Compression			21mm	2.32"	
38SIC-N4F	1/2" Female NPT	Industrial	3/8"	26mm	1.94"	0.94"
38SIC-N4M	1/2" Male NPT			22mm	2.04"	
38SIC-4B	1/2" Hose Barb			19mm	2.59"	

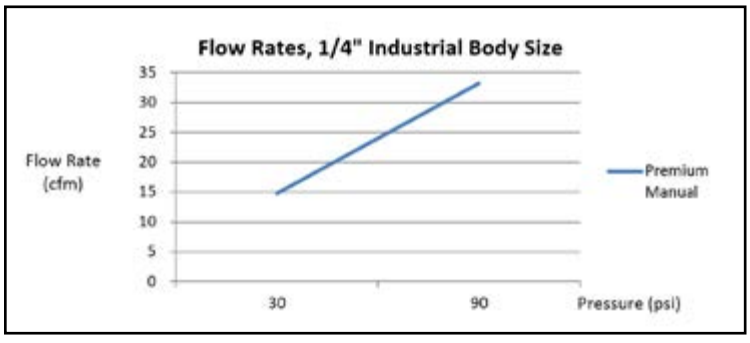

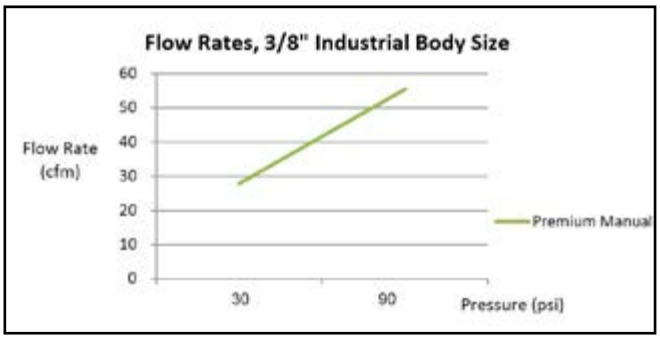

Pneumatic Quick Disconnect Couplings

Chrome-Plated Automatic Couplings

ATP's Premium Series Quick Disconnects are precision machined, chrome-plated steel. These Automatic couplers connect with the plug by simply pushing both units together.

- Automatic Connection
- Chrome-Plating Resists Corrosion, Easily Cleaned of Paint or Grease
- Rugged Steel Construction Maintains Integrity, not Easily Damaged like Brass
- Precision Machining Ensures Long Lasting, Leak-Free Connection
- 6 Retaining Balls Prolongs Seal life

Specifications	
Body Material	Chrome-Plated Steel
Maximum Working Pressure	150 psi
Temperature Range	32°F-150°F
Media	Compressed Air
Number of Pawls (Balls)	6
Seal Material	NBR (Buna-N)

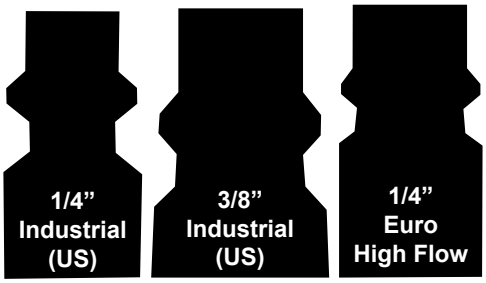

Chrome-Plated Automatic Couplings

Model	Thread	Interchange	Body Size	Hex	Length	OD
14SOC-N2F	1/4" Female NPT	Industrial	1/4"	17mm	2.04"	0.82"
14SOC-N2M	1/4" Male NPT				2.06"	
14SOC-2B	1/4" Hose Barb				2.53"	
14SOC-H14	1/4" x 3/8" Compression				2.32"	
14SOC-N3F	3/8" Female NPT	Industrial	1/4"	21mm	2.10"	0.82"
14SOC-N3M	3/8" Male NPT			17mm		
14SOC-3B	3/8" Hose Barb				2.61"	
38SOC-N2F	1/4" Female NPT	Industrial	3/8"	19mm	2.11"	0.94"
38SOC-N2M	1/4" Male NPT				2.24"	
38SOC-2B	1/4" Hose Barb				2.69"	
38SOC-H14	1/4" x 3/8" Compression			16mm	2.44"	
38SOC-N3F	3/8" Female NPT	Industrial	3/8"	21mm	2.22"	0.94
38SOC-N3M	3/8" Male NPT			19mm	2.28"	
38SOC-3B	3/8" Hose Barb				2.77"	
38SOC-H38	3/8" X 9/16" Compression			21mm	2.59"	
38SOC-N4F	1/2" Female NPT	Industrial	3/8"	26mm	2.24"	0.94
38SOC-N4M	1/2" Male NPT			22mm	2.34"	
38SOC-4B	1/2" Hose Barb			19mm	2.89"	
HFSOC-N2F	1/4" Female NPT	European/ High Flow	1/4"	19mm	2.10"	0.88"
HFSOC-N2M	1/4" Male NPT					
HFSOC-2B	1/4" Hose Barb			N/A	2.28"	
HFSOC-N3F	3/8" Female NPT	European/ High Flow	1/4"	21mm	2.14"	0.88"
HFSOC-N3M	3/8" Male NPT			19mm		
HFSOC-3B	3/8" Hose Barb			N/A	2.57"	
HFSOC-2F	1/4" Female BSPT	European/ High Flow	1/4"	19mm	2.10"	0.88"
HFSOC-2M	1/4" Male BSPT					
HFSOC-3F	3/8" Female BSPT			21mm	2.14"	
HFSOC-3M	3/8" Male BSPT			19mm		
HFSOC-50H	5mm x 8mm Compression	European/ High Flow	1/4"	19mm	2.22"	0.88"
HFSOC-65H	6.5mm x 10mm Compression				2.24"	
HFSOC-80H	8mm x 12mm Compression				2.34"	

Chrome-Plated Automatic Couplings (Continued)

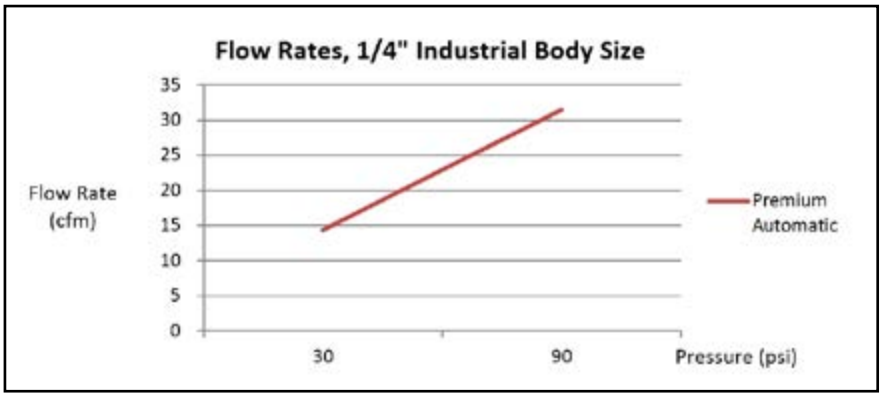

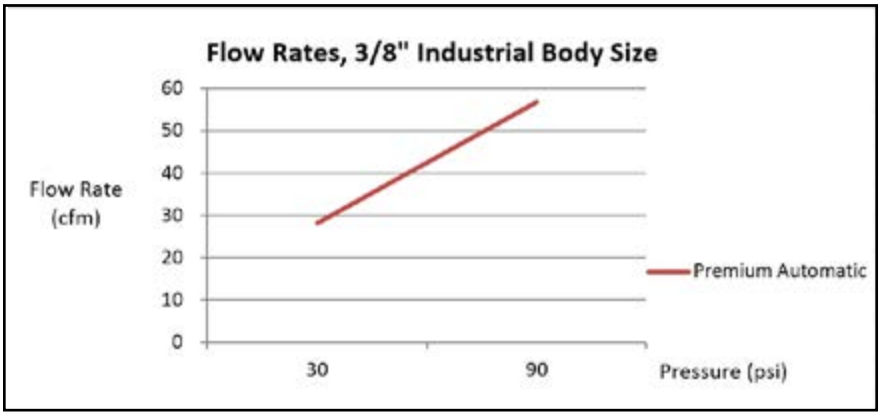

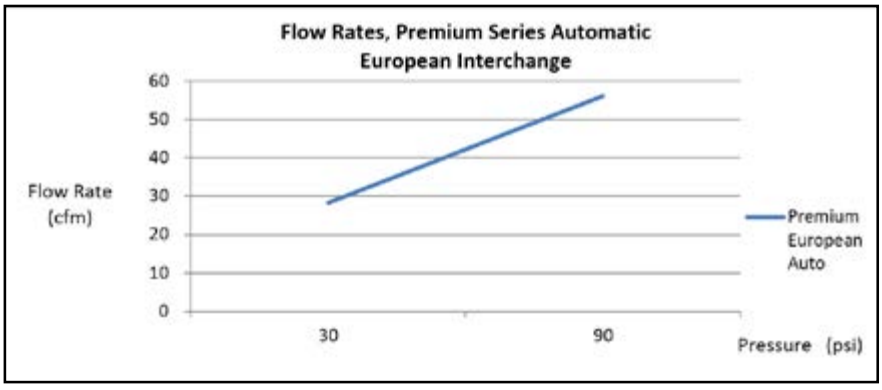

Pneumatic Quick Disconnect Couplings

Chrome-Plated Plugs

ATP's Premium Series Quick Disconnects are precision machined, chrome-plated steel.

- Chrome-Plating Resists Corrosion, Easily Cleaned of Paint or Grease
- Rugged Steel Construction Maintains Integrity, not Easily Damaged like Brass
- Precision Machining Ensures Long Lasting, Leak-Free Connection.

Specifications	
Body Material	Chrome-Plated Steel
Maximum Working Pressure	150 psi
Temperature Range	32°F-150°F
Media	Compressed Air

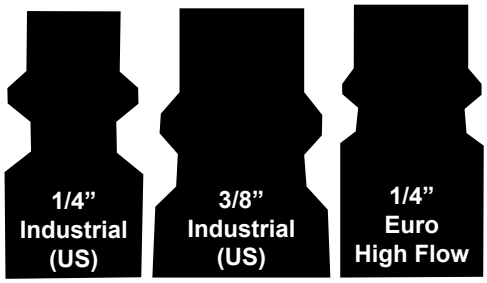

Chrome-Plated Plugs

Model	Thread	Interchange	Body Size	Hex	Length	OD
14PIC-N2F	1/4" Female NPT	Industrial	1/4"	17mm	1.57"	0.20"
14PIC-N2M	1/4" Male NPT			14mm	1.69"	
14PIC-2B	1/4" Hose Barb			N/A	2.00"	
14PIC-H14	1/4" x 3/8" Compression			16mm	1.95"	
14PIC-N3F	3/8" Female NPT	Industrial	1/4"	21mm	1.61"	0.20"
14PIC-N3M	3/8" Male NPT			19mm	1.73"	
14PIC-3B	3/8" Hose Barb			N/A	2.00"	
14PIC-H38	3/8" X 9/16" Compression			21mm		
38PIC-N2F	1/4" Female NPT	Industrial	3/8"	17mm	1.65"	0.28"
38PIC-N2M	1/4" Male NPT			16mm	1.78"	
38PIC-2B	1/4" Hose Barb			N/A	2.30"	
38PIC-H14	1/4" x 3/8" Compression			16mm	2.00"	
38PIC-N3F	3/8" Female NPT	Industrial	3/8"	21mm	1.71"	0.28"
38PIC-N3M	3/8" Male NPT			19mm	1.82"	
38PIC-3B	3/8" Hose Barb			N/A	2.30"	
38PIC-H38	3/8" X 9/16" Compression			21mm	2.26"	
38PIC-N4F	1/2" Female NPT	Industrial	3/8"	26mm	1.85"	0.28"
38PIC-N4M	1/2" Male NPT			22mm	1.90"	
38PIC-4B	1/2" Hose Barb			N/A	2.30"	
HFPC-N2F	1/4" Female NPT	European/ High Flow	1/4"	17mm	1.43"	0.28"
HFPC-N2M	1/4" Male NPT			14mm	1.51"	
HFPC-2B	1/4" Hose Barb			N/A	1.96"	
HFPC-N3F	3/8" Female NPT	European/ High Flow	1/4"	21mm	1.47"	0.28"
HFPC-N3M	3/8" Male NPT			19mm	1.66"	
HFPC-3B	3/8" Hose Barb			N/A	2.06"	
HFPC-2F	1/4" Female BSPT	European/ High Flow	1/4"	17mm	1.43"	0.28"
HFPC-2M	1/4" Male BSPT			14mm	1.51"	
HFPC-3F	3/8" Female BSPT	European/ High Flow	1/4"	21mm	1.47"	0.28"
HFPC-3M	3/8" Male BSPT			19mm	1.66"	
HFPC-50H	5mm x 8mm Compression	European/ High Flow	1/4"	19mm	1.62"	0.28"
HFPC-65H	6.5mm x 10mm Compression				1.72"	
HFPC-80H	8mm x 12mm Compression				1.82"	

Pneumatic Quick Disconnect Couplings

Chrome-Plated Universal Couplings

Connects with Industrial (US), TruFlate, ARO, European, and Lincoln Interchanges

ATP's Premium Series Quick Disconnects are precision machined, chrome-plated steel. These Automatic Universal coupling connect with the plug by simply pushing both units together. **All 5SOC series couplings will connect to Industrial, TruFlate, ARO, European, and Lincoln Interchanges.**

- Automatically Connects to Popular Interchanges
- Chrome-Plating Resists Corrosion, Easily Cleaned of Paint or Grease
- Steel Construction Maintains Integrity, not Easily Damaged like Brass
- Precision Machining Ensures Long Lasting, Leak-Free Connection.
- 6 Retaining Balls Prolong Seal life

Chrome-Plated Universal Couplings

Model	Thread	Interchange	Body Size	Hex	Length	OD
5SOC-N2F	1/4" Female NPT	Universal	1/4"	19mm	2.25"	0.94"
5SOC-N2M	1/4" Male NPT				2.36"	
5SOC-2B	1/4" Hose Barb				2.79"	
5SOC-H14	1/4" x 3/8" Compression				2.57"	
5SOC-N3F	3/8" Female NPT	Universal	1/4"	21mm	2.36"	0.94"
5SOC-N3M	3/8" Male NPT			19mm		
5SOC-3B	3/8" Hose Barb				2.87"	
5SOC-H38	3/8" X 9/16" Compression				2.69"	
5SOC-4B	1/2" Hose Barb	Universal	1/4"	19mm	2.99"	0.94"

Specifications	
Body Material	Chrome-Plated Steel
Maximum Working Pressure	150 psi
Temperature Range	32°F-150°F
Media	Compressed Air
Number of Pawls (Balls)	6
Seal Material	NBR (Buna-N)

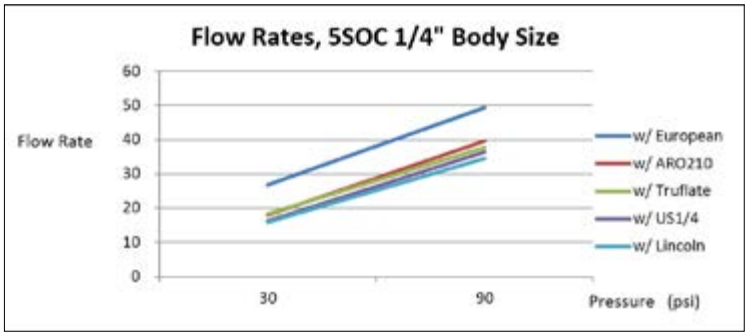

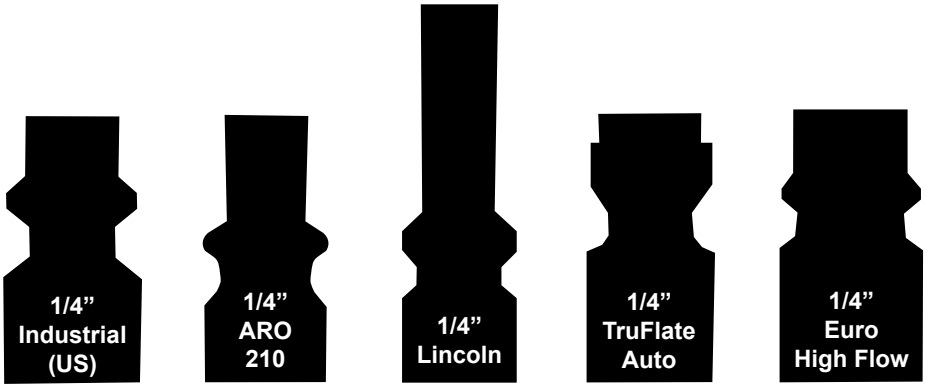

Chrome-Plated Japanese Interchange

ATP's Chrome-Plated Quick Disconnects are machined from steel, then chrome-plated for durability.

- Chrome-Plating Resists Corrosion, Easily Cleaned of Paint or Grease
- Steel Construction Maintains Integrity, Not Easily Damaged like Brass
- Precision Machining Ensures Long Lasting, Leak-Free Connection.

Specifications	
Body Material	Chrome-Plated Steel
Maximum Working Pressure	150 psi
Temperature Range	32°F-150°F
Media	Compressed Air
Number of Pawls (Balls)	6
Seal Material	NBR (Buna-N)

22 - DSF - NPT

Thread/Body Size	
22	1/4"
23	3/8"
24	1/2"

Style	
D	Japanese Interchange (JIS)
S	Socket/Couplings
P	Plug
M	Male Thread
F	Female Thread

Threads	
NPT	NPT
(Blank)	BSPT

Chrome-Plated Manual Couplings

These manual couplers connect with the plug by pulling back on the sleeve, and pushing both units together.

Chrome-Plated Manual Couplings

Model	Thread	Interchange	Body Size	Hex	Length	OD
22-DSF-NPT	1/4" Female NPT	Japanese	1/4"	19mm	1.81"	0.98"
22-DSM-NPT	1/4" Male NPT				1.96"	
22-DSH	1/4" Hose Barb				2.63"	
23-DSF-NPT	3/8" Female NPT	Japanese	1/4"	21mm	1.98"	0.98"
23-DSM-NPT	3/8" Male NPT			19mm	1.96"	
23-DSH	3/8" Hose Barb				2.79"	
24-DSF-NPT	1/2" Female NPT	Japanese	1/4"	26mm	2.00"	0.98"
24-DSM-NPT	1/2" Male NPT			21mm	2.02"	
24-DSH	1/2" Hose Barb			19mm	2.00"	
22-DSF	1/4" Female BSPT	Japanese	1/4"	19mm	1.81"	0.98"
22-DSM	1/4" Male BSPT				1.96"	
23-DSF	3/8" Female BSPT	Japanese	1/4"	21mm	1.98"	0.98"
23-DSM	3/8" Male BSPT			19mm	1.96"	
24-DSF	1/2" Female BSPT	Japanese	1/4"	26mm	2.00"	0.98"
24-DSM	1/2" Male BSPT			21mm	2.02"	
50-DSC	5mm x 8mm Compression	Japanese	1/4"	19mm	2.00"	0.98"
65-DSC	6.5mm x 10mm Compression				2.08"	
80-DSC	8mm x 12mm Compression				2.20"	

Pneumatic Quick Disconnect Couplings

Chrome-Plated Automatic Couplings

These Automatic Universal couplers connect with the plug by simply pushing both units together.

Chrome-Plated Automatic Couplings

Model	Thread	Interchange	Body Size	Hex	Length	OD
22-SOF	1/4" Female BSPT	Japanese	1/4"	19mm	1.81"	0.98"
22-SOM	1/4" Male BSPT				1.96"	
22-SOH	1/4" Hose Barb				2.63"	
23-SOF	3/8" Female BSPT	Japanese	1/4"	21mm	1.98"	0.98"
23-SOM	3/8" Male BSPT			19mm	1.96"	
23-SOH	3/8" Hose Barb				2.79"	
24-SOF	1/2" Female BSPT	Japanese	1/4"	26mm	2.00"	0.98"
24-SOM	1/2" Male BSPT			21mm	2.02"	
24-SOH	1/2" Hose Barb			19mm	2.00"	
50-SOC	5mm x 8mm Compression	Japanese	1/4"	19mm	1.81"	0.98"
65-SOC	6.5mm x 10mm Compression				1.96"	
80-SOC	8mm x 12mm Compression			21mm	1.98"	

Chrome-Plated Plugs

Machined from steel then plated, these plugs offer durability and a precision fit.

Chrome-Plated Plugs

Model	Thread	Interchange	Body Size	Hex	Length	OD
22-DPF-NPT	1/4" Female NPT	Japanese	1/4"	17mm	1.41"	0.29"
22-DPM-NPT	1/4" Male NPT				1.61"	
22-DPH	1/4" Hose Barb			N/A	2.24"	
23-DPF-NPT	3/8" Female NPT	Japanese	1/4"	21mm	1.47"	0.29"
23-DPM-NPT	3/8" Male NPT			19mm	1.65"	
23-DPH	3/8" Hose Barb			N/A	2.40"	
24-DPF-NPT	1/2" Female NPT	Japanese	1/4"	26mm	1.53"	0.29"
24-DPM-NPT	1/2" Male NPT			21mm	1.60"	
24-DPH	1/2" Hose Barb			N/A	2.55"	
22-DPF	1/4" Female BSPT	Japanese	1/4"	17mm	1.41"	0.29"
22-DPM	1/4" Male BSPT			14mm	1.61"	
23-DPF	3/8" Female BSPT	Japanese	1/4"	21mm	1.40"	0.29"
23-DPM	3/8" Male BSPT			19mm	1.65"	
24-DPF	1/2" Female BSPT	Japanese	1/4"	26mm	1.53"	0.29"
24-DPM	1/2" Male BSPT			21mm	1.67"	
50-DPC	5mm x 8mm Compression	Japanese	1/4"	17mm	1.61"	0.29"
65-DPC	6.5mm x 10mm Compression				1.71"	
80-DPC	8mm x 12mm Compression			19mm	1.81"	

Stainless Steel Series

Constructed of Stainless Steel for the ultimate in corrosion resistance and durability, these quick disconnects are the premium option for a long service life in the toughest environments. When corrosion, elevated temperatures, or repetitive cleaning is a concern, the stainless steel and Viton® seal construction is an effective solution.

- Ultimate Corrosion Resistance
- Ideal for Maritime, Continual Outdoor, or Corrosive Environments
- Viton® Seals
- 6 Retaining Balls Prolong Seal Life

Specifications	
Body Material	303 Stainless Steel
Maximum Working Pressure	300 psi
Temperature Range	32°F-150°F
Media	Gases & Liquids
Number of Pawls (Balls)	6
Seal Material	Viton®

SS 14 SI - N3F

Series	
SS	Stainless Steel

Body Size	
14	1/4" Industrial (US)
38	3/8" Industrial (US)
12	1/2" Industrial (US)

Style/Interchange	
S	Socket/Coupling
P	Plug
I	Manual

Threads	
N	NPT
2	1/4"
3	3/8"
4	1/2"
6	3/4"
M	Male
F	Female
B	Hose Barb

Stainless Steel Manual Couplings

Model	Thread	Interchange	Body Size	Hex	Length	OD
SS14SI-N2F	1/4" Female NPT	Industrial	1/4"	21mm	2.50"	0.69"
SS14SI-N2M	1/4" Male NPT				2.70"	
SS14SI-2B	1/4" Hose Barb				3.10"	
SS14SI-N3F	3/8" Female NPT	Industrial	1/4"	21mm	2.65"	0.69"
SS14SI-N3M	3/8" Male NPT				2.50"	
SS14SI-3B	3/8" Hose Barb				3.10"	
SS38SI-N2F	1/4" Female NPT	Industrial	3/8"	24mm	2.82"	1.25"
SS38SI-N2M	1/4" Male NPT				2.85"	
SS38SI-2B	1/4" Hose Barb				3.25"	
SS38SI-N3F	3/8" Female NPT	Industrial	3/8"	24mm	2.85"	1.25"
SS38SI-N3M	3/8" Male NPT					
SS38SI-3B	3/8" Hose Barb				3.25"	
SS12SI-N3F	3/8" Female NPT	Industrial	1/2"	27mm	3.50"	1.30"
SS12SI-N3M	3/8" Male NPT				3.31"	
SS12SI-3B	3/8" Hose Barb				3.75"	
SS12SI-N4F	1/2" Female NPT	Industrial	1/2"	27mm	3.50"	1.30"
SS12SI-N4M	1/2" Male NPT					
SS12SI-4B	1/2" Hose Barb				3.75"	
SS12SI-N6F	3/4" Female NPT	Industrial	1/2"	27mm	3.75"	1.30"
SS12SI-N6M	3/4" Male NPT				3.50"	
SS12SI-6B	3/4" Hose Barb				3.75"	

Pneumatic Quick Disconnect Couplings

SS 14 SI - N3F

Series	
SS	Stainless Steel

Body Size	
14	1/4" Industrial (US)
38	3/8" Industrial (US)
12	1/2" Industrial (US)

Style/Interchange	
S	Socket/Coupling
P	Plug
I	Manual

Threads	
N	NPT
2	1/4"
3	3/8"
4	1/2"
6	3/4"
M	Male
F	Female
B	Hose Barb

Specifications	
Body Material	303 Stainless Steel
Maximum Working Pressure	300 psi
Temperature Range	32°F-150°F
Media	Gases & Liquids

Stainless Steel Plugs

Model	Thread	Interchange	Body Size	Hex	Length	OD
SS14PI-N2F	1/4" Female NPT	Industrial	1/4"	16mm	1.50"	0.69"
SS14PI-N2M	1/4" Male NPT			14mm	1.69"	
SS14PI-2B	1/4" Hose Barb			13mm	2.14"	
SS14PI-N3F	3/8" Female NPT	Industrial	1/4"	19mm	1.71"	0.69"
SS14PI-N3M	3/8" Male NPT			18mm	1.75"	
SS14PI-3B	3/8" Hose Barb			14mm	2.14"	
SS38PI-N2F	1/4" Female NPT	Industrial	3/8"	16mm	2.82"	1.25"
SS38PI-N2M	1/4" Male NPT			18mm	2.85"	
SS38PI-2B	1/4" Hose Barb				3.25"	
SS38PI-N3F	3/8" Female NPT	Industrial	3/8"	19mm	2.82"	1.25"
SS38PI-N3M	3/8" Male NPT			18mm	2.85"	
SS38PI-3B	3/8" Hose Barb				3.25"	
SS12PI-N3F	3/8" Female NPT	Industrial	1/2"	19mm	2.25"	1.30"
SS12PI-N3M	3/8" Male NPT			17mm	2.30"	
SS12PI-3B	3/8" Hose Barb			N/A	2.54"	
SS12PI-N4F	1/2" Female NPT	Industrial	1/2"	24mm	2.25"	1.30"
SS12PI-N4M	1/2" Male NPT			22mm	2.30"	
SS12PI-4B	1/2" Hose Barb			N/A	2.54"	
SS12PI-N6F	3/4" Female NPT	Industrial	1/2"	30mm	2.33"	1.30"
SS12PI-N6M	3/4" Male NPT			27mm	2.54"	
SS12PI-6B	3/4" Hose Barb			N/A		

Stainless Steel Japanese Interchange

22 - DSF - SUS303

Thread/Body Size	
22	1/4”
23	3/8”
24	1/2”

Style	
D	Japanese Interchange (JIS)
S	Socket/Couplings
P	Plug
M	Male Thread
F	Female Thread

Material	
303	Stainless Steel

Japanese Interchange Manual Couplings

Model	Thread	Interchange	Body Size	Hex	Length	OD
22-DSF-SUS303	1/4” Female BSPT	Japanese	1/4”	19mm	1.81”	0.98”
22-DSM-SUS303	1/4” Male BSPT				1.96”	
22-DSH-SUS303	1/4” Hose Barb				2.63”	
23-DSF-SUS303	3/8” Female BSPT	Japanese	1/4”	21mm	1.98”	0.98”
23-DSM-SUS303	3/8” Male BSPT				1.96”	
23-DSH-SUS303	3/8” Hose Barb			19mm	2.79”	
24-DSF-SUS303	1/2” Female BSPT	Japanese	1/4”	26mm	2.00”	0.98”
24-DSM-SUS303	1/2” Male BSPT			21mm	2.02”	
24-DSH-SUS303	1/2” Hose Barb			19mm	2.79”	

Japanese Interchange Plugs

Model	Thread	Interchange	Body Size	Hex	Length	OD
22-DPF-SUS303	1/4” Female BSPT	Japanese	1/4”	19mm	1.81”	0.98”
22-DPM-SUS303	1/4” Male BSPT				1.96”	
22-DPH-SUS303	1/4” Hose Barb				2.63”	
23-DPF-SUS303	3/8” Female BSPT	Japanese	1/4”	21mm	1.98”	0.98”
23-DPM-SUS303	3/8” Male BSPT				1.96”	
23-DPH-SUS303	3/8” Hose Barb			19mm	2.79”	
24-DPF-SUS303	1/2” Female BSPT	Japanese	1/4”	26mm	2.00”	0.98”
24-DPM-SUS303	1/2” Male BSPT			21mm	2.02”	
24-DPH-SUS303	1/2” Hose Barb			19mm	2.79”	

Pneumatic Quick Disconnect Couplings

Zinc-Plated Steel Economy Series

Zinc-Plated Couplings are a great economical option for any job-site or industrial setting. These couplers are machined from steel, providing a hard surface that is not easily damaged like brass or aluminum.

Specifications	
Body Material	Zinc-Plated Steel
Maximum Working Pressure	150 psi
Temperature Range	32°F-150°F
Media	Compressed Air
Number of Pawls (Balls)	4
Seal Material	NBR (Buna-N)

14 SI - N3F

Body Size/Interchange	
14	1/4" Industrial (US)
38	3/8" Industrial (US)

Style	
S	Socket/Coupling
P	Plug
I	Manual

Threads	
N	NPT
1	1/8"
2	1/4"
3	3/8"
4	1/2"
M	Male Thread
F	Female Thread

Manual Coupling

Model	Thread	Interchange	Body Size	Hex	Length	OD
14SI-N2F	1/4" Female NPT	Industrial	1/4"	19mm	1.88"	0.86"
14SI-N2M	1/4" Male NPT				2.11"	
14SI-N3F	3/8" Female NPT			21mm	1.98"	
14SI-N3M	3/8" Male NPT	Industrial	1/4"	19mm	2.11"	0.86"
14SI-N4F	1/2" Female NPT			24mm	2.09"	
14SI-N4M	1/2" Male NPT			22mm	2.33"	
38SI-N2F	1/4" Female NPT	Industrial	3/8"	22mm	2.24"	1.06"
38SI-N2M	1/4" Male NPT				2.36"	
38SI-N3F	3/8" Female NPT			24mm		
38SI-N3M	3/8" Male NPT	Industrial	3/8"	22mm	2.36"	1.06"
38SI-N4F	1/2" Female NPT			24mm	2.40"	
38SI-N4M	1/2" Male NPT			22mm	2.50"	

Pneumatic Quick Disconnect Couplings

14 PI - N3F

Body Size/Interchange	
14	1/4" Body Size
38	3/8" Body Size
HFP	European/ High Flow

Style	
P	Plug
I	Industrial (US)
A	ARO 210
T	TruFlate

Threads	
N	NPT
(blank)	BSPT
1	1/8"
2	1/4"
3	3/8"
4	1/2"
M	Male Thread
F	Female Thread

Specifications	
Body Material0	Zinc-Plated Steel
Maximum Working Pressure	150 psi
Temperature Range	32°F-150°F
Media	Compressed Air

Plugs

Model	Thread	Interchange	Body Size	Hex	Length	OD
14PI-N2F	1/4" Female NPT	Industrial	1/4"	17mm	1.55"	0.20"
14PI-N2M	1/4" Male NPT			14mm	1.66"	
14PI-N3F	3/8" Female NPT			17mm	1.55"	
14PI-N3M	3/8" Male NPT				1.66"	
38PI-N2F	1/4" Female NPT	Industrial	3/8"	17mm	1.50"	0.28"
38PI-N2M	1/4" Male NPT				1.87"	
38PI-N3F	3/8" Female NPT				1.50"	
38PI-N3M	3/8" Male NPT				1.87"	
38PI-N4F	1/2" Female NPT				1.50"	
38PI-N4M	1/2" Male NPT				1.87"	
14PA-N2F	1/4" Female NPT	ARO 210	1/4"	17mm	1.47"	0.20"
14PA-N2M	1/4" Male NPT			14mm	1.70"	
14PA-N3F	3/8" Female NPT			17mm	1.47"	
14PA-N3M	3/8" Male NPT				1.70"	
14PT-N2F	1/4" Female NPT	Tru-Flate	1/4"	16mm	1.48"	0.20"
14PT-N2M	1/4" Male NPT			14mm	1.59"	
14PT-N3F	3/8" Female NPT			18mm	1.50"	
14PT-N3M	3/8" Male NPT				1.69"	
HFP-N2F	1/4" Female NPT	European/ High Flow	1/4"	17mm	1.48"	0.28"
HFP-N2M	1/4" Male NPT			14mm	1.51"	
HFP-N3F	3/8" Female NPT			17mm	1.47"	
HFP-N3M	3/8" Male NPT				1.66"	
HFP-2F	1/4" Female BSPT	European/ High Flow	1/4"	17mm	1.48"	0.28"
HFP-2M	1/4" Male BSPT			14mm	1.51"	
HFP-3F	3/8" Female BSPT			17mm	1.47"	
HFP-3M	3/8" Male BSPT				1.66"	

The New Generation
FREE ANGLE®
The Improved, Ergonomic, Patented Swivel Fitting From ATP

Free-Angle® Plugs

The Free-Angle® Series was introduced in the early 1990's to address ergonomic issues in assembly settings. The Free-Angle® provides an ergonomic connection between air tools and hose. The Free-Angle® swivels 360° and pivots 45°, preventing kinking, tangles, and strain on compressed air lines.

- Reduces Operator Fatigue during Repetitive Movements
- Two Swivel Joints Enhance Ergonomics
- Minimizes Twisting in Straight and Spiral Hoses
- Chrome-Plating Resists Corrosion, Easily Cleaned of Paint or Grease
- Thread Sealant on all Male Fittings

Specifications	
Material	Chrome-Plated Steel
Maximum Working Pressure	145 psi
Temperature Range	23°F - 140°F
Media	Compressed Air

NFAP - N2M - UA

Style	
NFAP	Free-Angle® Plug

Thread Style	
N	NPT
(Blank)	BSPT
1	1/8"
2	1/4"
3	3/8"
M	Male Thread

Interchange	
UA	1/4" Industrial (US)
UB	3/8" Industrial (US)
ARO210	ARO 210
TRUFL	TruFlate
LN	Lincoln
C320	European/High Flow
C84	ISO 6150-C
JIS	Japanese (JIS)

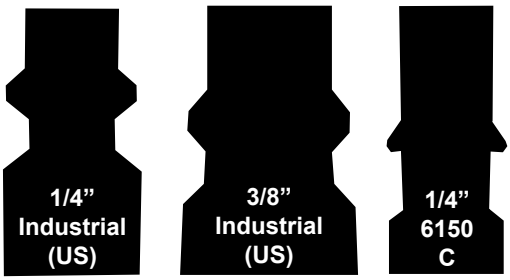

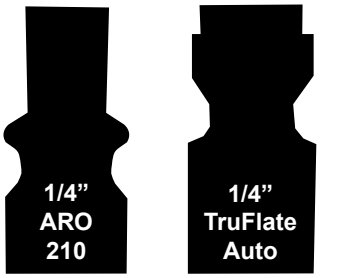

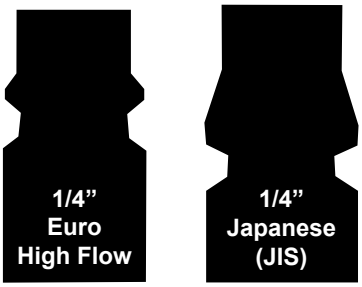

Free Angle® Plugs

Model	Thread	Interchange	Body Size	Hex	Length	OD
NFAP-N1M-UA	1/8" Male NPT	Industrial	1/4"	19mm	1.88"	0.20"
NFAP-N2M-UA	1/4" Male NPT				2.11"	
NFAP-N3M-UA	3/8" Male NPT		3/8"	21mm	1.98"	0.20"
NFAP-N2M-UB	1/4" Male NPT	Industrial	3/8"	19mm	2.11"	0.28"
NFAP- N3M-UB	3/8" Male NPT			24mm	2.09"	
NFAP- N2M-A210	1/4" Male NPT	ARO 210	1/4"	22mm	2.33"	0.20"
NFAP- N2M-TRUFL	1/4" Male NPT	TruFlate	1/4"	22mm	2.24"	0.20"
NFAP- N2M-LN	1/4" Male NPT	Lincoln	1/4"	N/A	2.36"	0.19"
NFAP- N2M-C320	1/4" Male NPT	Euro 7,2	1/4"	24mm	2.36"	0.28"
NFAP- N2M-C84	1/4" Male NPT	ISO 6150-C	1/4"	22mm	2.36"	0.31"
NFAP-2M-C84	1/4" Male BSPT			24mm	2.40"	
NFAP- N2M-JIS	1/4" Male NPT	Japanese	1/4"	22mm	2.50"	0.29"
NFAP-2M-JIS	1/4" Male BSPT					

See Free-Angle® Threaded Fittings : Page 254

Full Flow Safety Couplings

Safety Slide™

The Safety-Slide™ features a compact, lightweight design that increases safety, and reduces user fatigue when compared to a traditional coupler design. The Patented locking mechanism prevents accidental disconnection while under pressure. The Safety-Slide™ **eliminates the valve and spring often seen in traditional couplers**, providing unrestricted flow and maximum tool performance. Connecting the Safety-Slide™ is accomplished under zero pressure by inserting the plug, and pivoting. All Safety-Slide™ Couplings are Chrome-Plated for easy clean-up in automotive or paint settings, and available in multiple sizes.

- Full Flow Design Eliminates Traditional Valves
- Safety Lock Connection Prevents Disconnection, Reducing Risk of Injury
- Bleeds Downstream Pressure Before Disconnection
- Chrome-Plating Resists Corrosion, Easily Cleaned of Paint or Grease
- Steel Construction Maintains Integrity, not Easily Damaged like Brass
- Will Not Degrade Flow When Joining Hoses

Specifications	
Body Material	Chrome-Plated Steel
Working Pressure	15 - 210 psi
Temperature Range	23°F - 140°F
Seal	Buna-N Rubber

14 DF - N2M

Body Size/Interchange	
14	1/4" Industrial (US)
38	3/8" Industrial (US)
12	1/2" Industrial (US)

Style	
DF	Safety-Slide™

Thread	
N	NPT Thread
2	1/4"
3	3/8"
4	1/2"
B	Barb
M	Male
F	Female

Connecting the Safety-Slide™

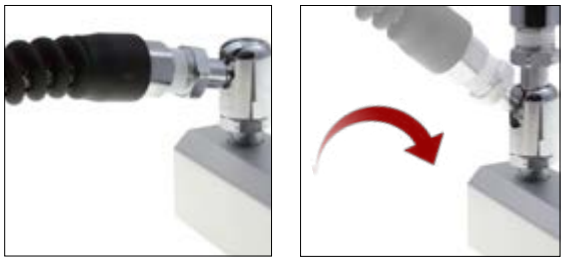

Step 1:
Insert Plug into Safety-Slide™

Step 2:
Pivot the Plug into the Locked Position within the Safety-Slide™

Disconnecting the Safety-Slide™

Step 1:
While Simultaneously Pushing inward, Pivot the Plug to Release Pressure

Step 2:
Remove the Plug from the Safety-Slide™

Pneumatic Quick Disconnect Couplings

Safety-Slide™ Premium Safety Couplings

Model	Thread	Interchange	Body Size	Hex	Length	OD
14DF-N2F	1/4" Female NPT	Industrial	1/4"	19mm	1.73"	0.83"
14DF-N2M	1/4" Male NPT				1.85"	
14DF-2B	1/4" Hose Barb				2.32"	
14DF-N3F	3/8" Female NPT	Industrial	1/4"	21mm	1.77"	0.83"
14DF-N3M	3/8" Male NPT			19mm	1.93"	
14DF-3B	3/8" Hose Barb				2.40"	
14DF-N4F	1/2" Female NPT	Industrial	1/4"	26mm	1.85"	0.83"
14DF-N4M	1/2" Male NPT			22mm	2.00"	
38DF-N2F	1/4" Female NPT	Industrial	3/8"	22mm	1.57"	0.94"
38DF-N2M	1/4" Male NPT				1.93"	
38DF-2B	1/4" Hose Barb				2.40"	
38DF-N3F	3/8" Female NPT	Industrial	3/8"	22mm	1.81"	0.94"
38DF-N3M	3/8" Male NPT				2.05"	
38DF-3B	3/8" Hose Barb				2.48"	
38DF-N4F	1/2" Female NPT	Industrial	3/8"	26mm	1.89"	0.94"
38DF-N4M	1/2" Male NPT			22mm	2.05"	
38DF-4B	1/2" Hose Barb				2.59"	
12DF-N3F	3/8" Female NPT	Industrial	1/2"	24mm	1.77"	1.10"
12DF-N3M	3/8" Male NPT				2.24"	
12DF-3B	3/8" Hose Barb				2.67"	
12DF-N4F	1/2" Female NPT	Industrial	1/2"	26mm	2.09"	1.10"
12DF-N4M	1/2" Male NPT			24mm	2.24"	
12DF-4B	1/2" Hose Barb				2.79"	
12DF-N6F	3/4" Female NPT	Industrial	1/2"	32mm	2.17"	1.10"

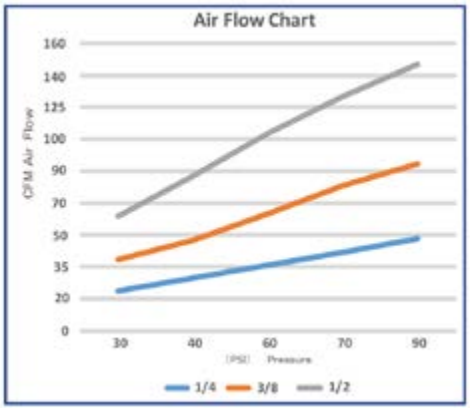

Japanese Interchange

Safety Slide™

DF 02M

Body Size/Interchange
1/4" Japanese (JIS)

Style	
DF	Safety-Slide™

Thread	
M	Male
F	Female
B	Barb
02	1/4"
03	3/8"
04	1/2"
50	5mm x 8mm
65	6.5mm x 10mm
80	8mm x 12mm
110	11mm x 16mm

Specifications	
Body Material	Chrome-Plated Steel
Working Pressure	20 - 210 psi
Temperature Range	23°F - 140°F
Seal	Buna-N Rubber

Safety-Slide™ Premium Safety Couplings

Model	Thread	Interchange	Body Size	Hex	Length	OD
DF02F	1/4" Female BSPT	Japanese	1/4"	22mm	1.60"	0.94"
DF02M	1/4" Male BSPT			22mm	1.97"	
DF02B	1/4" Hose Barb			22mm	2.44'	
DF03F	3/8" Female BSPT	Japanese	1/4"	22mm	1.85"	0.94"
DF03M	3/8" Male BSPT			22mm	2.08"	
DF03B	3/8" Hose Barb			22mm	2.52"	
DF04F	1/2" Female BSPT	Japanese	1/4"	26mm	1.93"	0.94"
DF04M	1/2" Male BSPT			22mm	2.08"	
DF04B	1/2" Hose Barb			22mm	2.64"	
DF50	5mm x 8mm Compression	Japanese	1/4"	22mm	2.08"	0.94"
DF65	6.5mm x 10mm Compression			22mm	2.20"	
DF80	8mm x 12mm Compression			22mm	2.28"	
DF110	11mm x 16mm Compression			23mm		

Safety-Touch™

Push Button Safety Coupling

Patent # 9464742

ATP's Safety-Touch™ Push Button Coupler features a safe method of disconnection with a single hand. By depressing the release button once, pressure is safely vented before removing the plug. The patented design of the Safety-Touch™ eliminates the sudden rush of air observed after disconnecting conventional Couplings

- Single Press Release Vents Pressure, Reducing Risk of Injury
- Protective Cover for Delicate Surfaces
- Chrome-Plated Steel, Easily Cleaned of Paint or Grease
- 6 Balls Provide Secure Connection

14 BC - N3F

Body Size/Interchange	
14	1/4" Industrial (US)
38	3/8" Industrial (US)
(Blank)	1/4" Japanese (JIS)

Style	
BC	Safety-Touch™

Threads	
(Blank)	BSPT
N	NPT
2	1/4"
3	3/8"
M	Male Thread
F	Female Thread
B	Hose Barb

Specifications	
Body Material	Chrome-Plated Steel
Maximum Working Pressure	175 psi
Temperature Range	20°F to 140°F
Media	Compressed Air
Number of Pawls (Balls)	6
Seal Material	Buna-N
Tariff Code	7307.99.4000

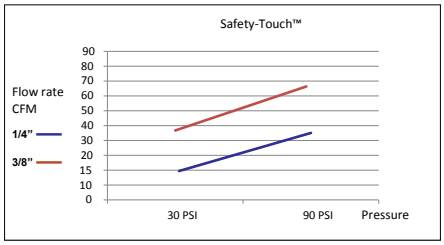

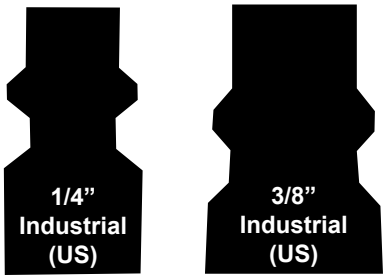

Safety-Touch™ Push Button Safety Coupler

Model	Thread	Interchange	Body Size	Hex	Length	O.D.
14BC-2B	1/4" Hose Barb	Industrial	1/4"	17mm	3.41"	1.27"
14BC-3B	3/8" Hose Barb				3.48"	
14BC-N2F	1/4" Female NPT				2.91"	
14BC-N2M	1/4" Male NPT				2.93"	
14BC-N3F	3/8" Female NPT			21mm	2.97"	
14BC-N3M	3/8" Male NPT			17mm	2.97"	
38BC-2B	1/4" Hose Barb	Industrial	3/8"	19mm	3.58"	1.37"
38BC-3B	3/8" Hose Barb				3.66"	
38BC-N2F	1/4" Female NPT				3.11"	
38BC-N2M	1/4" Male NPT				3.15"	
38BC-N3F	3/8" Female NPT			21mm	3.15"	
38BC-N3M	3/8" Male NPT			19mm	3.15"	
38BC-N4F	1/2" Female NPT			21mm	3.15"	
38BC-N4M	1/2" Male NPT			19mm	3.15"	
BC-2B	1/4" Hose Barb	Japanese	1/4"	19mm	3.70"	1.37"
BC-2F	1/4" Female BSPT				3.22"	
BC-2M	1/4" Male BSPT				3.26"	
BC-3B	3/8" Hose Barb			19mm	3.77"	
BC-3F	3/8" Female BSPT			21mm	3.26"	
BC-3M	3/8" Male BSPT			19mm	3.26"	

Locking Universal Safety Coupling

Safety-Twist™

ATP's Safety-Twist™ Locking Universal Safety Coupling features a secure method of connection. The Safety-Twist™ automatically connects by simply inserting a plug into the coupling.

Once connected, a sleeve rotates and locks the connection. To disconnect the Safety-Twist™, simply twist and pull back on the sleeve. Downstream pressure is safely vented before the plug can be removed. The locking connection is suited for assembly areas where unintended disconnection would damage surrounding equipment.

The Safety-Twist™ works with all 1/4" Body Industrial, TruFlate, and ARO Plugs.

- Locking Connection Prevents Unintended Separation
- Safely Vents Pressure before Disconnection
- Universal, Works with 3 Major US Interchanges
- Chrome-Plated Steel, Easily Cleaned of Paint or Grease
- 6 Balls Provide Precise Interface with Plug

3 USC - N2F

Body Size/Interchange	
3	1/4" Universal

Style	
USC	Safety-Twist™

Threads	
N	NPT
2	1/4"
M	Male Thread
F	Female Thread
H14	Hose Compression

Specifications	
Body Material	Chrome-Plated Steel
Maximum Working Pressure	0-215 psi
Temperature Range	20°F to 140°F
Media	Compressed Air
Number of Pawls (Balls)	6
Seal Material	Buna-N
Tariff Code	7307.99.4000

Safety-Twist™ Locking Universal Safety Couplings

Model	Thread	Interchange	Body Size	Hex	Length	O.D.	Weight (oz.)
3USC-N2M	1/4" Male NPT	Industrial, ARO, TruFlate	1/4"	19mm	2.28"	1.00"	3.8
3USC-N2F	1/4" Female NPT				2.20"		4.3
3USC-H14	1/4" Hose Compression				2.79"		4.2

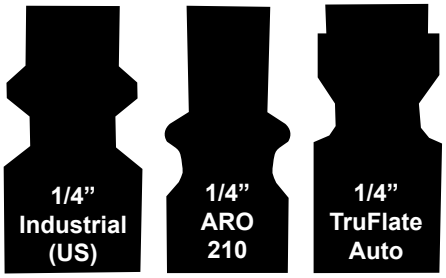

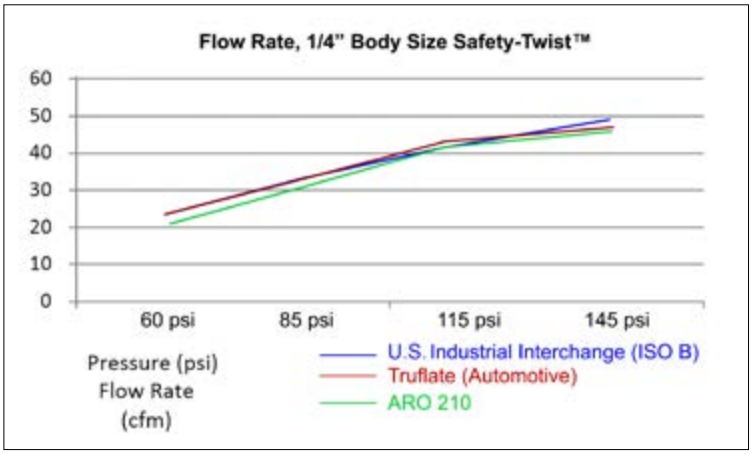

Cubic Feet/Minute Flow Rates

Model	60 psi	85 psi	115 psi	145 psi
U.S. Industrial Interchange (ISO B)	23	33	41	49
Truflate (Automotive)	23	33	42	48
ARO 210	22	32	41	47

TST Swing SC Couplers

TST Swing Couplers provide full, non-restricted performance in a heavy-duty package. Connection is achieved by inserting the plug into the coupler and pivoting. To unlock, pull the protective sleeve back and pivot.

- Safely Vents Pressure at Disconnection
- Connects Easily, without Extra Force Required at 0 psi

Specifications	
Working Pressure	200 psi
Temperature Range	-4°F to 212°F
Body Construction	Nickel-Plated Steel
Seal Material	NBR Rubber

Industrial Interchange Models

Item	Thread	Interchange	Body Size	Series	Length	Diameter	Weight lb
205 00 317	1/4" Male NPT	Industrial	1/4"	B1	2.20" (56.1mm)	0.78" (20mm)	0.25
205 00 318	3/8" Male NPT				2.30" (58.6mm)		
205 00 319	1/2" Male NPT				2.54" (64.6mm)		
205 00 311	1/4" Female NPT				1.92" (48.8mm)		
205 00 312	3/8" Female NPT						
205 00 313	1/2" Female NPT				1.91" (48.6mm)		
205 00 320	1/4" (6mm) Hose Barb				2.68" (68.1mm)		
205 00 321	5/16" (8mm) Hose Barb						
205 00 322	3/8" (10mm) Hose Barb						
205 00 214	1/4" Male NPT	Industrial	3/8"	E	2.21" (56.2mm)	0.94" (24mm)	0.33
205 00 030	3/8" Male NPT						
205 00 031	1/2" Male NPT				2.30" (58.5mm)		
205 00 052	1/4" Female NPT				2.69" (68.5mm)		
205 00 026	3/8" Female NPT				2.30" (58.5mm)		
205 00 027	1/2" Female NPT				2.89" (73.5mm)		
205 00 083	5/16" (8mm) Hose Barb				3.20" (81.5mm)		
205 00 084	3/8" (10mm) Hose Barb						
205 00 085	1/2" (13mm) Hose Barb						
205 00 113	1/2" Male NPT	Industrial	1/2"	H	3.12" (79.3mm)	1.32" (35mm)	0.33
205 00 114	3/4" Male NPT						
205 00 110	1/2" Female NPT				3.27" (83.3mm)		
205 00 111	3/4" Female NPT				3.55" (90.3mm)		

Pneumatic Quick Disconnect Couplings

ARO Interchange Models

Item	Thread	Interchange	Body Size	Series	Length	Diameter	Weight lb
205 00 297	1/4" Male NPT	ARO	1/4"	A1	1.92" (48.8mm)	0.78" (20mm)	0.33
205 00 298	3/8" Male NPT						0.33
205 00 299	1/2" Male NPT				1.91" (48.6mm)		0.16
205 00 291	1/4" Female NPT				2.20" (56.1mm)		
205 00 292	3/8" Female NPT				2.30" (58.6mm)		
205 00 293	1/2" Female NPT				2.54" (64.6mm)		
205 00 300	1/4" (6mm) Hose Barb				2.68" (68.1mm)		
205 00 301	5/16" (8mm) Hose Barb						
205 00 302	3/8" (10mm) Hose Barb						

European Interchange Models

Item	Thread	Interchange	Body Size	Series	Length	Diameter	Weight lb
205 00 375	1/4" Male NPT	European	1/4"	C	2.21" (56.2mm)	0.94" (24mm)	0.16
205 00 354	3/8" Male NPT						0.33
205 00 355	1/2" Male NPT				2.30" (58.5mm)		
205 00 348	1/4" Female NPT				2.69" (68.5mm)		
205 00 349	3/8" Female NPT						
205 00 350	1/2" Female NPT				2.89" (73.5mm)		
205 00 356	1/4" (6mm) Hose Barb				3.20" (81.5mm)		
205 00 357	5/16" (8mm) Hose Barb						
205 00 358	3/8" (10mm) Hose Barb						

Protective Housing Covers

Plastic Housing Covers

These covers are installed over the housing to protect work pieces.

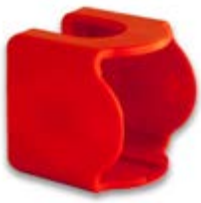

Item	Swing Coupler Series	Weight lb
295 00 385	A1, B1	0.01
295 00 340	C, E	
295 00 531	HB	

Vinyl Protective Covers

These covers are installed over the entire airline assembly providing complete protection of delicate surfaces.

Item	Swing Coupler Series	Weight lb
295 00 480	A1, B1	0.08
295 00 481	C, E	

Brass Fittings & Mufflers

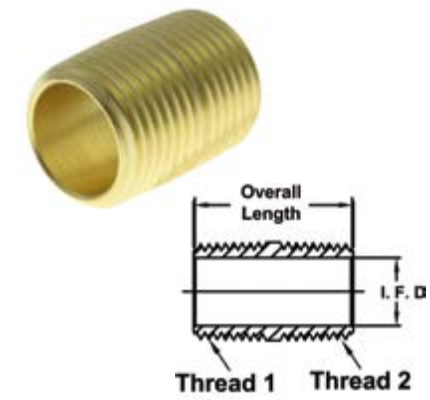

Male Close Nipple

Male x Male connection without a hex

Part Number	Thread 1	Thread 2	Hex Size	Overall Length	Inside Flow Diameter
MCC01-01	1/8" Male NPT	1/8" Male NPT	N/A	0.750"	0.281"
MCC02-02	1/4" Male NPT	1/4" Male NPT		0.880"	0.375"
MCC03-03	3/8" Male NPT	3/8" Male NPT		1.000"	0.500"
MCC04-04	1/2" Male NPT	1/2" Male NPT		1.130"	0.625"
MCC06-06	3/4" Male NPT	3/4" Male NPT		1.310"	0.750"

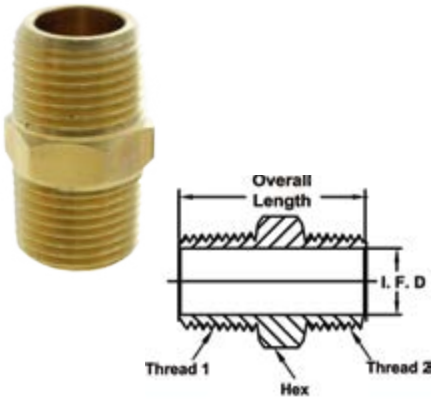

Male Hex Nipple

Male x Male connection with a hex

Part Number	Thread 1	Thread 2	Hex Size	Overall Length	Inside Flow Diameter
MC01-01	1/8" Male NPT	1/8" Male NPT	7/16"	0.970"	0.220"
MC02-02	1/4" Male NPT	1/4" Male NPT	9/16"	1.380"	0.314"
MC03-03	3/8" Male NPT	3/8" Male NPT	11/16"	1.410"	0.440"
MC04-04	1/2" Male NPT	1/2" Male NPT	7/8"	1.810"	0.564"
MC06-06*	3/4" Male NPT	3/4" Male NPT	1 1/16"	1.810"	0.752"
*Note: Non-Stock Item					

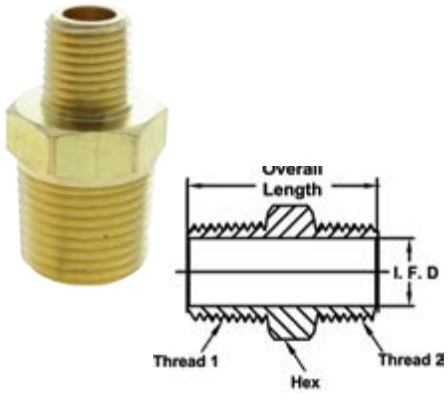

Male Hex Reducing Nipple

Male x Male reducing connection with a hex

Part Number	Thread 1	Thread 2	Hex Size	Overall Length	Inside Flow Diameter
MC02-01	1/4" Male NPT	1/8" Male NPT	9/16"	1.19"	0.220"
MC03-01	3/8" Male NPT	1/8" Male NPT	11/16"	1.22'	0.220"
MC03-02	3/8" Male NPT	1/4" Male NPT	11/16"	1.41"	0.314"
MC04-02	1/2" Male NPT	1/4" Male NPT	7/8"	1.62"	0.314"
MC04-03	1/2" Male NPT	3/8" Male NPT	7/8"	1.62"	0.440"
MC06-04*	3/4" Male NPT	1/2" Male NPT	1 1/16"	1.80"	0.564"
*Note: Non-Stock Item					

Male Long Nipple

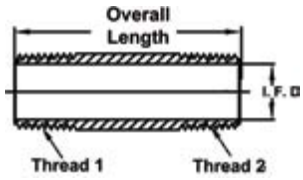

Male x Male connection without a hex in various lengths

Part Number	Thread 1	Thread 2	Hex Size	Overall Length	Inside Flow Diameter
MCL01-15	1/8" Male NPT	1/8" Male NPT	N/A	1.50"	0.250"
MCL01-20				2.00"	
MCL01-25				2.50"	
MCL01-30				3.00"	
MCL02-15	1/4" Male NPT	1/4" Male NPT	N/A	1.50"	0.375"
MCL02-20				2.00"	
MCL02-25				2.50"	
MCL02-30				3.00"	
MCL03-15	3/8" Male NPT	3/8" Male NPT	N/A	1.50"	0.500"
MCL03-20				2.00"	
MCL03-25				2.50"	
MCL03-30				3.00"	
MCL04-15	1/2" Male NPT	1/2" Male NPT	N/A	1.50"	0.625"
MCL04-20				2.00"	
MCL04-25				2.50"	
MCL04-30				3.00"	

Female Hex Coupling

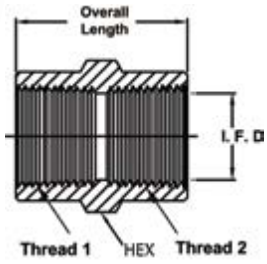

Female x Female connection with a hex

Part Number	Thread 1	Thread 2	Hex Size	Overall Length	Inside Flow Diameter
FC01-01	1/8" Female NPT	1/8" Female NPT	9/16"	0.750"	0.339"
FC02-02	1/4" Female NPT	1/4" Female NPT	3/4"	1.120"	0.441"
FC03-03	3/8" Female NPT	3/8" Female NPT	7/8"	1.120"	0.517'
FC04-04	1/2" Female NPT	1/2" Female NPT	1 1/16"	1.500"	0.703"
FC06-06L*	3/4" Female NPT	3/4" Female NPT	1 3/8"	1.190"	0.906"
*Note: Non-Stock Item					

Female Hex Reducing Coupling

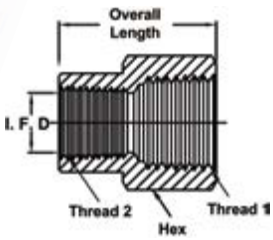

Female x Female reducing connection with a hex

Part Number	Thread 1	Thread 2	Hex Size	Overall Length	Inside Flow Diameter
FC02-01	1/4" Female NPT	1/8" Female NPT	3/4"	0.97"	0.339"
FC03-02	3/8" Female NPT	1/4" Female NPT	7/8"	1.16"	0.441"
FC04-02	1/2" Female NPT	1/4"Female NPT	1 1/16"	1.28"	0.441"
FC04-03	1/2" Female NPT	3/8" Female NPT	1 1/16"	1.38"	0.517"
FC06-03*	3/4" Female NPT	3/8" Female NPT	1 3/8"	1.32"	0.517"
FC06-04*	3/4" Female NPT	1/2" Female NPT	1 3/8"	1.19"	0.703'
*Note: Non-Stock Item					

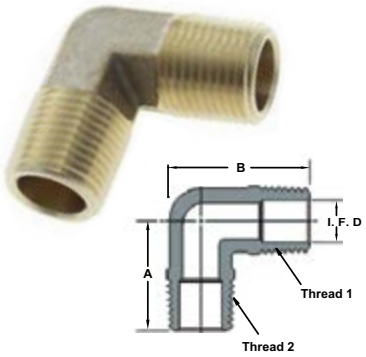

Male Elbow Connector

Male x Male Elbow

Part Number	Thread 1	Thread 2	"A"	"B"	Inside Flow Diameter
ML01-01	1/8" Male NPT	1/8" Male NPT	0.71"	0.912"	0.220"
ML02-02	1/4" Male NPT	1/4" Male NPT	0.90"	1.170"	0.312"
ML03-03	3/8" Male NPT	3/8" Male NPT	1.09"	1.427"	0.408"
ML04-04	1/2" Male NPT	1/2" Male NPT	1.41"	1.830"	0.502"

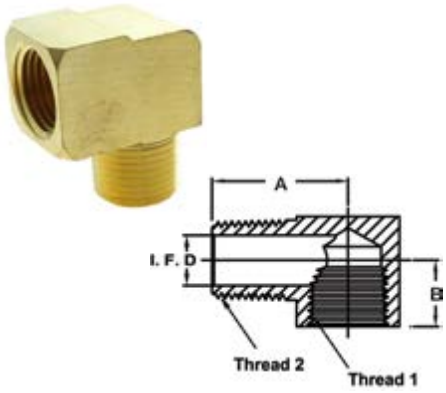

Street Elbow

Male x Female Elbow

Part Number	Thread 1	Thread 2	"A"	"B"	Inside Flow Diameter
STL01-01	1/8" Female NPT	1/8" Male NPT	0.66"	0.48"	0.22"
STL02-02	1/4" Female NPT	1/4" Male NPT	0.91"	0.72"	0.34"
STL03-03	3/8" Female NPT	3/8" Male NPT	0.97"	0.78"	0.41"
STL04-04	1/2" Female NPT	1/2" Male NPT	1.25"	1.03"	0.56"
STL06-06*	3/4" Fale NPT	3/4" Male NPT	1.39"	1.10"	0.75"
*Note: Non-Stock Item					

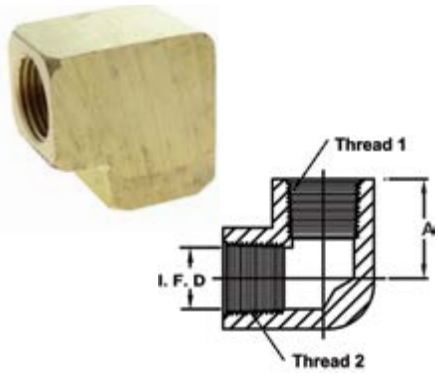

Female Union Elbow

Female x Female Elbow

Part Number	Thread 1	Thread 2	"A"	Inside Flow Diameter
FL01-01	1/8" Female NPT	1/8" Female NPT	0.55"	0.339"
FL02-02	1/4" Female NPT	1/4" Female NPT	0.78"	0.441"
FL03-03	3/8" Female NPT	3/8" Female NPT	0.84"	0.571"
FL04-04	1/2" Female NPT	1/2" Female NPT	1.07"	0.703"
*Note: Non-Stock Item				

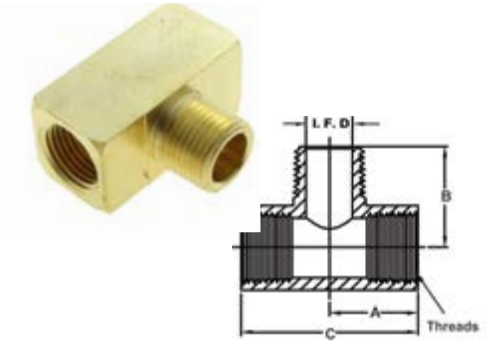

Male Branch Tee

Two Female and One Male Thread

Part Number	Threads	"A"	"B"	"C"	Inside Flow Diameter
FBT01-01	1/8" NPT	0.53"	0.66"	1.060"	0.220"
FBT02-02	1/4" NPT	0.76"	0.91"	1.520"	0.314"
FBT03-03	3/8" NPT	0.84"	0.97"	1.680"	0.440"
FBT04-04	1/2" NPT	1.09"	1.25"	1.180"	0.564"
FBT06-06*	3/4" NPT	1.16"	1.38"	1.320"	0.752"
*Note: Non-Stock Item					

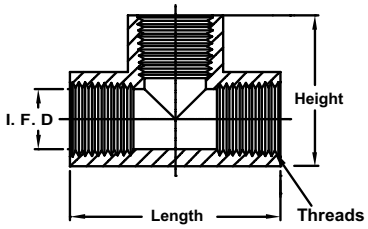

Union Tee

Three Female Threads

Part Number	Threads	Height	Length	Inside Flow Diameter
FT01-01	1/8" Female NPT	0.53"	1.060"	0.339"
FT02-02	1/4" Female NPT	0.76"	1.520"	0.441'
FT03-03	3/8" Female NPT	0.84"	1.680"	0.571"
FT04-04	1/2" Female NPT	1.07"	2.140"	0.703"

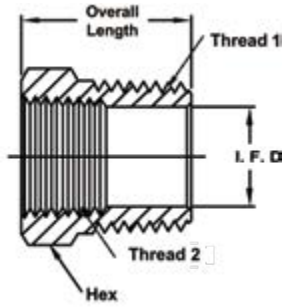

Bushings

Male x Female Adapter used to transition a smaller male fitting into a larger female thread

Part Number	Thread 1	Thread 2	Hex Size	Overall Length	Inside Flow Diameter
BU02-01	1/4" Male NPT	1/8" FemaleNPT	9/16"	0.750"	0.339"
BU03-01	3/8" Male NPT	1/8" Female NPT	11/16"	0.750"	0.339"
BU03-02		1/4" FemaleNPT	3/4"	0.750"	0.441"
BU04-01	1/2" Male NPT	1/8" Female NPT	7/8"	1.000"	0.339"
BU04-02		1/4" Female NPT	7/8"	1.000"	0.441"
BU04-03		3/8" Female NPT	7/8"	1.000"	0.571"
BU06-01*	3/4" Male NPT	1/8" Female NPT	1 1/8"	1.000"	0.339"
BU06-02*		1/4" FemaleNPT	1 1/8"	1.000"	0.441"
BU06-03*		3/8" Female NPT	1 1/8"	1.000"	0.571"
BU06-04*		1/2" Female NPT	1 1/8"	1.000"	0.703"
BU08-04*	1" Male NPT	1/2" Female NPT	1 3/8"	1.310"	0.703"
BU08-06*		3/4" Female NPT	1 3/8"	1.310"	0.906"
*Note: Non-Stock Item					

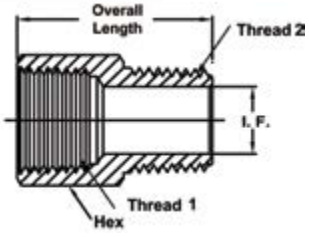

Male x Female Connector

Male x Female Adapter used to extend a connection

Part Number	Thread 1	Thread 2	Hex Size	Overall Length	Inside Flow Diameter
MFC01-01	1/8" Female NPT	1/8" Male NPT	9/16"	0.880"	0.220"
MFC02-02	1/4" Female NPT	1/4" Male NPT	3/4"	1.250"	0.314"
MFC03-03	3/8" Female NPT	3/8" Male NPT	7/8"	1.250"	0.440"
MFC04-04*	1/2" Female NPT	1/2" Male NPT	1 1/16"	1.660"	0.564"
MFC06-06	3/4" Female NPT	3/4" Male NPT	1 3/8"	1.690"	0.752"
*Note: Non-Stock Item					

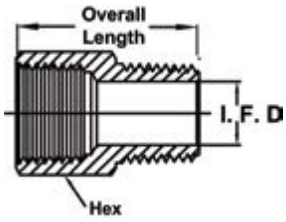

Male x Female Reducing Connector

Male x Female Reducing Adapter

Part Number	Thread 1	Thread 2	Hex Size	Overall Length	Inside Flow Diameter
MFC02-01	1/4" Female NPT	1/8" Male NPT	3/4"	1.060"	0.220"
MFC03-01	3/8" Female NPT	1/8" Male NPT	7/8"	1.100"	0.220"
MFC03-02		1/4" Male NPT		1.250"	0.314"
MCF04-02*	1/2" Female NPT	1/4" Male NPT	1"	1.470"	0.314"
MFC04-03		3/8" Male NPT	1 1/16"	1.470"	0.440'
MFC06-03*	3/4" Female NPT	3/8" Male NPT	1 3/8"	1.500"	0.440"
MFC06-04*		1/2" Male NPT		1.690"	0.564"
*Note: Non-Stock Item					

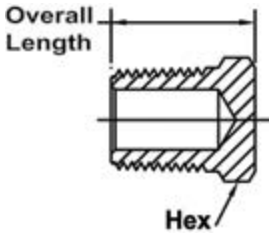

Hex Head Plug

Male Threaded Pipe Plug with a Hex

Part Number	Thread	Hex Size	Overall Length
HHP01	1/8" Male NPT	7/16"	0.560"
HHP02	1/4" Male NPT	9/16"	0.747"
HHP03	3/8" Male NPT	11/16"	0.780"
HHP04	1/2" Male NPT	7/8"	0.970"
HHP06*	3/4 Male NPT	1 1/16"	1.054"
*Note: Non-Stock Item			

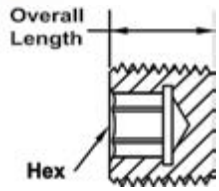

Countersunk Hex Head Plug

Male Threaded Pipe Plug with an Internal Hex

Part Number	Thread	Internal Hex Size	Overall Length
RHP01	1/8" Male NPT	3/16"	0.300"
RHP02	1/4" Male NPT	1/4"	0.460"
RHP03	3/8" Male NPT	5/16"	0.460"
RHP04	1/2" Male NPT	3/8"	0.610"
RHP06*	3/4 Male NPT	9/16'	0.620"
*Note: Non-Stock Item			

Hose Mender

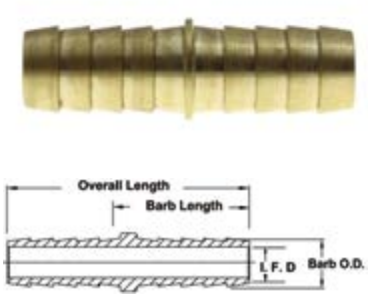

Barb x Barb Fitting allowing for Joining Hoses

Part Number	Hose I.D.	Flange Diameter	Overall Length	Barb length	Barb O.D.	Inside Flow Diameter
HM14-00	1/4"	7/16"	2.00"	0.97"	0.290"	0.187"
HM516-00	5/16'	9/16"	2.00"	0.97"	0.353"	0.250"
HM38-00	3/8"	11/16"	2.00"	0.97"	0.415"	0.281"
HM12-00	1/2"	7/8"	2.00"	0.97"	0.530"	0.375"
HM34-00*	3/4"	1 1/16"	2.00"	0.97"	0.790"	0.562"
*Note: Non-Stock Item						

Hose Barb

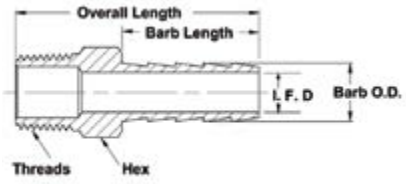

Male Pipe Thread x Hose Barb Connection

Part Number	Hose I.D.	Threads	Hex Size	Overall Length	Barb Length	Barb O.D.	Inside Flow Diameter
HBM14-01	1/4"	1/8" Male NPT	7/16"	1.540"	0.97"	0.290"	0.187"
HBM14-02		1/4" Male NPT	9/16"	1.720"			
HBM14-03		3/8" Male NPT	11/16"	1.770"			
HBM516-01*	5/16"	1/8" Male NPT	7/16"	1.540"	0.97"	0.353"	0.250"
HBM516-02*		1/4" Male NPT	9/16"	1.720"			
HBM516-03*		3/8" Male NPT	11/16"	1.770"			
HBM38-01	3/8"	1/8" Male NPT	7/16"	1.540"	0.97"	0.415"	0.281"
HBM38-02		1/4" Male NPT	9/16'	1.720"			
HBM38-03		3/8" Male NPT	11/16"	1.770"			
HBM38-04		1/2" Male NPT	7/8"	1.970"		0.530"	0.375"
HBM12-02	1/2"	1/4" Male NPT	9/16"	1.720"	0.97"	0.530"	0.375"
HBM12-03		3/8" Male NPT	11/16"	1.770"			
HBM12-04		1/2" Male NPT	7/8"	1.970"			
HBM12-06*		3/4 Male NPT	1 1/16"	1.980"			
HBM58-03*	5/8"	3/8" Male NPT	11/16"	1.770"	0.97"	0.645"	0.468"
HBM58-04*		1/2" Male NPT	7/8"	1.970"			
HBM58-06*		3/4 Male NPT	1 1/16"	1.980"			
HBM34-04*	3/4"	1/2" Male NPT	7/8"	1.970"	0.97"	0.790"	0.562"
HBM34-06*		3/4 Male NPT	1 1/16"	1.980"			
HBM1-06*	1"	3/4 Male NPT	1 1/16"	2.180"	1.17"	1.020"	0.750"
HBM1-08*		1" Male NPT	1 3/8"	2.360"			
*Note: Non-Stock Item							

Sintered Bronze Cone-Style Mufflers

Designed to thread into the exhaust port of air tools or other equipment, reducing noise

Part Number	Thread	Hex	Length
SBM01	1/8" Male NPT	12mm	0.945"
SBM02	1/4" Male NPT	17mm	1.181"
SBM03	3/8" Male NPT	18mm	1.378"
SBM04	1/2" Male NPT	24mm	1.732"
SBM-M5	M5 x 0.8	8mm	20mm
SBM01-PT	1/8" Male BSPT	12mm	24mm
SBM02-PT	1/4" Male BSPT	16mm	30mm
SBM03-PT	3/8" Male BSPT	18mm	35mm
SBM04-PT	1/2" Male BSPT	24mm	44mm

Brass Wire Mesh Mufflers

A low-profile unit designed to thread into the exhaust port of air tools or other equipment, reducing noise

Part Number	Thread	Hex	Length
BWM-01	1/8" Male NPT	12mm	0.472"
BWM-02	1/4" Male NPT	17mm	0.591"
BWM-03	3/8" Male NPT	18mm	0.669"
BWM-04	1/2" Male NPT	24mm	0.728"
BWM-M5	M5 x 0.8	8mm	9.5mm
BWM-01-PT	1/8" Male BSPT	12mm	12.0mm
BWM-02-PT	1/4" Male BSPT	16mm	15.0mm
BWM-03-PT	3/8" Male BSPT	18mm	17.0mm
BWM-04-PT	1/2" Male BSPT	24mm	18.5mm

Plastic/Felt Mufflers

A lightweight unit designed to thread into the exhaust port of air tools or other equipment, reducing noise

Part Number	Thread	Hex	Length	Color
PFM01	1/8" Male NPT	0.551"	1.299"	Blue
PFM02	1/4" Male NPT	0.669"	1.673"	Blue
PFM03	3/8" Male NPT	0.886"	2.146"	Blue
PFM04	1/2" Male NPT	1.023"	2.697"	Blue
PFM02-PT	1/4" Male BSPT	17mm	42.5mm	Yellow
PFM03-PT	3/8" Male BSPT	22mm	54.5mm	Yellow
PFM04-PT	1/2" Male BSPT	26mm	68.5mm	Yellow

Aluminum Manifolds

Rectangle Manifolds
Rectangle Manifolds provide two supply ports and multiple branch circuits. This arrangement enables the manifold to be placed in the middle of an air supply, allowing air to flow through.

Part Number	Inlet	Outlet	Number of Outlets	Length	Width	Height	Weight
MLA-3	1/2” Female NPT	1/4” Female NPT	3	4.57”	1.57”	1.57”	13.75oz
MLA-5	1/2” Female NPT	1/4” Female NPT	5	7.50”	1.57”	1.57”	21.90oz

MLA-3

MLA-5

Round Manifolds
Round Aluminum Manifolds feature a compact package, enabling multiple outlets to branch off a single inlet. The arrangement of the manifold provides a nearly in-line arrangement.

Part Number	Inlet	Outlet	Number of Outlets	Length	Width	Height	Weight
MYA-2	1/4” Female NPT	1/4” Female NPT	2	1.55”	1.55”	1.50”	2.50oz
MYA-3	1/4” Female NPT	1/4” Female NPT	3	1.55”	1.55”	1.50”	2.30oz

MYA-2

MYA-3

Free-Angle® Fittings

The New Generation FREE ANGLE
The Improved, Ergonomic, Patented Swivel Fitting From ATP

The Free-Angle® Series was introduced in the early 1990's to address ergonomic issues in assembly settings. The Free-Angle® provides an ergonomic connection to air tools and equipment. The Free-Angle® swivels 360° and pivots 45°, preventing kinking, tangles, and strain on compressed air lines.

- Reduces Operator Fatigue during Repetitive Movements
- Two Swivel Joints Enhance Ergonomics
- Minimizes Twisting in Straight and Spiral Hoses
- Chrome-Plating Resists Corrosion, Easily Cleaned of Paint or Grease
- Thread Sealant on all Male Fittings

NFA - N2M - N2M

Style	
NFA	Free-Angle® Fitting
NFAB	Free-Angle® Hose Barb

Thread Style	
N	NPT
(Blank)	BSPT
G	BSPP
1	1/8"
2	1/4"
3	3/8"
M	Male Thread
F	Female Thread

Thread Style	
N	NPT
(Blank)	BSPT
G	BSPP
1	1/8"
2	1/4"
3	3/8"
M	Male Thread

Specifications	
Material	Chrome-Plated Steel
Maximum Working Pressure	145 psi
Temperature Range	23°F - 140°F
Media	Compressed Air
Seal Material	NBR- Rubber

Model	Thread 1	Hex 1	Thread 2	Hex 2	Length	O.D.
NFAN2F-N1M	1/4" Female NPT	19mm	1/8" Male NPT	19mm	2.12" (53.8mm)	0.74" (19.0mm)
NFAN2F-N2M			1/4" Male NPT		2.25" (57.1mm)	
NFAN2F-N3M			3/8" Male NPT		2.31" (58.6mm)	
NFAN3F-N3M	3/8" Female NPT	19mm	3/8" Male NPT	19mm	2.31" (58.6mm)	0.74" (19.0mm)
NFAN2M-N2M	1/4" Male NPT	19mm	1/4" Male NPT	19mm	2.31" (58.6mm)	0.74" (19.0mm)
NFAN3M-N3M	3/8" Male NPT	19mm	3/8" Male NPT	21mm	2.37" (60.1mm)	0.74" (19.0mm)
NFA2M-2M	1/4" Male BSPT	19mm	1/4" Male BSPT	19mm	2.31" (58.6mm)	0.74" (19.0mm)
NFA3M-3M	3/8" Male BSPT	19mm	3/8" Male BSPT	21mm	2.37" (60.1mm)	0.74" (19.0mm)
NFA2F-2M	1/4" Female BSPT	19mm	1/4" Male BSPT	19mm	2.25" (57.1mm)	0.74" (19.0mm)
NFA3F-3M	3/8" Female BSPT	19mm	3/8" Male BSPT	21mm	2.31" (58.6mm)	0.74" (19.0mm)
NFAB-N1M-2	1/8" Male NPT	19mm	1/4" Hose Barb	N/A	2.75" (69.8mm)	0.74" (19.0mm)
NFAB-N2M-2	1/4" Male NPT	19mm	1/4" Hose Barb	N/A	2.81" (71.3mm)	0.74" (19.0mm)
NFAB-N2M-3	1/4" Male NPT	19mm	3/8" Hose Barb	N/A	3.00" (76.2mm)	0.74" (19.0mm)
NFAB-N3M-3	3/8" Male NPT	19mm	3/8" Hose Barb	N/A	3.00" (76.2mm)	0.74" (19.0mm)

See Free-Angle® Plugs, Page 237

Free-Elbow

Free Elbow™

The innovative design of the Free Elbow provides increased airflow compared to competing units. A swivel along with a rotating joint provide an unrestricted range of motion for the user, reducing fatigue.

FEN 2F - N2M

FE	Free-Elbow

N	NPT
(Blank)	BSPT
2	1/4”
3	3/8”
4	1/2”
F	Female Thread
M	Male Thread

N	NPT
(Blank)	BSPT
2	1/4”
3	3/8”
4	1/2”
F	Female Thread
M	Male Thread

Specifications	
Material	Chrome-Plated Steel
Maximum Working Pressure	145 psi
Temperature Range	23°F - 140°F
Media	Compressed Air
Seal Material	NBR- Rubber

Model	Thread 1	Hex 1	Thread 2	Hex 2	Length	O.D.
FEN2F-N2M	1/4” Female NPT	19mm	1/4” Male NPT	19mm	2.40” (60.9mm)	0.80” (20.3mm)
FEN3F-N3M	3/8” Female NPT		3/8” Male NPT		2.44” (61.9mm)	
FEN4F-N4M	1/2” Female NPT	24mm	1/2” Male NPT	24mm	2.85” (72.3mm)	1.02” (25.9mm)
FE2F-2M	1/4” Female BSPT	19mm	1/4” Male BSPT	19mm	2.40” (60.9mm)	0.80” (20.3mm)
FE3F-3M	3/8” Female BSPT		3/8” Male BSPT		2.44” (61.9mm)	
FE4F-4M	1/2” Female BSPT	24mm	1/2” Male BSPT	24mm	2.85” (72.3mm)	1.02” (25.9mm)

Tubing & Hose Clamps

OETIKER®

General Information

Advanced Technology Products offers two lines of hose clamps, Oetiker® Ear Clamps, and Worm Drive Clamps.

Ear Clamps
Ear Clamps offer a simple, long lasting installation where removal or disassembly is generally not required. Care must be taken during the clamping procedure to ensure that the proper amount of force is used during crimping. ATP offers Oetiker® Clamp Installation Tools in a variety of configurations.

Clamping Instructions are provided in the description of each category.

Ear Clamps

	101 Series	151 Series	153 Series	155 Series Mechanical Interlock	167 Series Stepless®
Number of Ears	2	2	1	1	1
Material	Zinc-Plated Steel	Stainless Steel	Stainless Steel	Stainless Steel	Stainless Steel

Oetiker® 167 Group Stepless® Clamps

Offering uniform compression force, Stepless® Ear Clamps from Oetiker® are a great choice for creating strong connections.

- Conforms to ASTM F877/F2098
- Burr-free edges reduce damage to hoses being clamped
- Narrow width concentrates clamping force
- Suitable for Tubing or Hose
- Stainless Steel Construction

Selection: Measure the outside diameter (O.D.) of the hose to be clamped. Select a clamp with an average size range that is close to the hose's O.D. An optimal clamp size will allow the hose's O.D. to fall in the middle of the clamp's size range.

Clamping Procedure: After assembling the hose, use an Oetiker® ear clamping tool to compress the clamp's ear. The clamp's ear should be reduced in size by at least 40% to provide enough clamping force. If sized correctly, the clamp's ear should not close completely during compression.

Note: All Clamps sold in Bag Quantities of 100

167 Series, 5mm Band Width

Part Number	Range (mm) Close - Open	Range (inch) Close - Open	Ear Width (Inside)	Band Thickness	Band Width
16702488	5.30 - 6.50	0.208 – 0.255	4mm	0.5mm	5mm
16700001	5.80 - 7.00	0.225 - 0.276			
16700002	6.90 - 8.00	0.267 - 0.315			
16700003	7.00 - 8.70	0.276 - 0.342	5.5mm		
16700004	7.80 - 9.50	0.307 - 0.374			
16700005	8.30 - 10.0	0.326 - 0.393			
16700006	8.80 - 10.5	0.346 - 0.413			
16702492	9.20 - 10.9	0.362 - 0.429			
16700007	9.60 - 11.3	0.377 - 0.444			
16700008	10.1 - 11.8	0.397 - 0.464			

167 Series, 7mm Band Width

Part Number	Range (mm) Close - Open	Range (inch) Close - Open	Ear Width (Inside)	Band Thickness	Band Width
16702951	9.40 - 11.9	0.37 - 0.46	8mm	0.6mm	7mm
16700009	9.80 - 12.3	0.38 - 0.48			
16702493	10.3 - 12.8	0.40 - 0.50			
16700010	10.8 - 13.3	0.42 - 0.52			
16700011	11.3 - 13.8	0.44 - 0.54			
16700012	11.5 - 14.0	0.45 - 0.55			
16702864	11.7 - 14.2	0.46 - 0.55			
16700013	12.0 - 14.5	0.47 - 0.57			
16700014	12.3 - 14.8	0.48 - 0.58			
16700015	12.8 - 15.3	0.50 - 0.60			
16700016	13.2 - 15.7	0.51 - 0.61			
16702998	13.5 - 16.0	0.53 - 0.62			
16702494	13.7 - 16.2	0.53 - 0.63			
16702495	14.1 - 16.6	0.55 - 0.65			
16702496	14.3 - 16.8	0.56 - 0.66			
16700017	14.5 - 17.0	0.57 - 0.66			
16702497	15.0 - 17.5	0.59 - 0.68			
16700018	14.6 - 17.8	0.58 - 0.70	10mm		
16700019	14.8 - 18.0	0.58 - 0.70			
16700020	15.3 - 18.5	0.60 - 0.72			
16700110	16.0 - 19.2	0.62 - 0.75			
16702498	16.6 - 19.8	0.65 - 0.77			
16700024	17.8 - 21.0	0.70 - 0.82			
16700026	19.4 - 22.6	0.76 - 0.88			
16700028	20.3 - 26.5	0.79 - 1.04			
16700029	20.9 - 24.1	0.82 - 0.94			
16700031	22.4 - 25.6	0.88 - 1.00			
16700033	23.9 - 27.1	0.94 - 1.06			
16700035	25.4 - 28.6	1.00 - 1.12			
16700047	26.9 - 30.1	1.05 - 1.18			
16700039	27.6 - 30.8	1.08 - 1.21			
16700040	28.4 - 31.6	1.11 – 1.24			
16700042	29.9 - 31.6	1.17 – 1.24			
16700044	31.4 - 34.6	1.23 – 1.36			
16700046	32.9 - 36.1	1.29 – 1.42			
16700048	34.4 - 37.6	1.35 - 1.48			
16700050	34.9 - 38.1	1.37 - 1.50			
16700052	36.4 - 39.6	1.43 - 1.55			
16700053	37.8 - 41.0	1.48 - 1.61			
16700054	39.3 - 42.5	1.54 - 1.67			
16700055	40.8 - 44.0	1.60 - 1.73			

167 Series, 7mm Band Width (continued)

Part Number	Range (mm) Close - Open	Range (inch) Close - Open	Ear Width (Inside)	Band Thickness	Band Width
16700056	42.3 - 45.5	1.66 - 1.79			
16700057	43.8 - 47.0	1.72 - 1.85			
16700058	45.3 - 48.5	1.78 - 1.90			
16700059	46.8 - 50.0	1.84 - 1.96			
16700060	48.3 - 51.5	1.90 - 2.02			
16700061	49.8 - 53.0	1.96 - 2.08			
16700062	51.3 - 54.5	2.01 - 2.14			
16700063	52.8 - 56.0	2.07 - 2.20			
16700064	54.3 - 57.5	2.13 - 2.26			
16700065	55.8 - 59.0	2.19 - 2.32			
16700066	57.3 - 60.5	2.25 - 2.38			
16700067	58.8 - 62.0	2.31 - 2.44			
16700068	60.3 - 53.5	2.37 - 2.10			
16700069	61.8 - 65.0	2.43 - 2.55			
16700070	63.3 - 66.5	2.49 - 2.61			
16700071	64.8 - 68.0	2.55 - 2.67			
16700072	66.3 - 69.5	2.61 - 2.73			
16700073	67.8 - 71.0	2.66 – 2.79			
16700074	69.3 - 72.5	2.72 – 2.85			
16700075	70.8 - 74.0	2.78 – 2.91			
16700076	72.3 - 75.5	2.84 – 2.97	10mm	0.6mm	7mm
16700077	73.8 - 77.0	2.90 – 3.03			
16700078	75.3 - 78.5	2.96 – 3.09			
16700079	76.8 - 80.0	3.02 – 3.14			
16700080	78.3 - 81.5	3.08 – 3.20			
16700081	79.8 - 83.0	3.14 – 3.26			
16700082	81.3 - 84.5	3.20 – 3.32			
16700083	82.8 - 86.0	3.24 – 3.38			
16700084	84.3 - 87.5	3.31 – 3.44			
16700085	85.8 - 89.0	3.77 - 3.50			
16700086	87.3 - 90.5	3.44 - 3.56			
16700087	88.8 - 92.0	3.49 - 3.62			
16700088	90.3 - 93.5	3.55 - 3.68			
16700089	91.8 - 95.0	3.61 - 3.74			
16700090	93.3 - 96.5	3.67 - 3.79			
16700091	94.8 - 98.0	3.73 - 3.85			
16700092	96.3 - 99.5	3.79 - 3.97			
16700093	97.8 - 101.0	3.85 - 3.97			
16700094	99.3 - 102.5	3.90 - 4.03			
16700095	100.8 - 104.0	3.96 - 4.09			
16700096	102.3 - 105.5	4.03 - 4.15			

167 Series, 9mm Band Width

Part Number	Range (mm) Close - Open	Range (inch) Close - Open	Ear Width (Inside)	Band Thickness	Band Width
16700097	103.8 - 107.0	4.08 - 4.21	10mm	0.6mm	7mm
16700098	105.3 - 108.5	4.14 - 4.27			
16700099	106.8 - 110.0	4.20 - 4.33			
16700100	108.3 - 111.5	4.26 - 4.38			
16700101	109.8 - 113.0	4.32 - 4.44			
16700102	111.3 - 114.5	4.38 - 4.50			
16700103	112.8 - 116.0	4.44 - 4.56			
16700104	114.3 - 117.5	4.50 - 4.62			
16700105	115.8 - 119.0	4.55 - 4.68			
16700106	117.3 - 120.5	4.61 - 4.74			
16706383	17.80 – 21.00	0.70 – 0.82			9mm
16707693	19.40 – 22.60	0.76 – 0.88			
16707694	20.30 – 23.50	0.79 - 0.92			
16707695	20.90 – 24.10	0.82 – 0.94			
16707696	22.40 – 25.60	0.88 – 1.00			
16707533	23.90 – 27.10	0.94 – 1.06			
16707697	25.40 – 28.60	1.00 – 1.12			
16707698	26.90 – 30.10	1.05 – 1.18			
16707517	27.60 – 30.80	1.07 – 1.21			
16707488	28.40 – 31.60	1.11 – 1.24			
16703913	29.90 – 33.10	1.17 – 1.30			
16707641	31.40 – 34.60	1.23 – 1.36			
16704715	32.90 – 38.10	1.29 – 1.50			
16707494	34.40 – 37.60	1.35 – 1.48			
16707645	34.90 – 38.10	1.37 – 1.50			
16707306	36.40 – 39.60	1.43 – 1.55			
16707300	37.80 - 41.00	1.48 – 1.61			
16703914	39.30 – 42.50	1.54 – 1.67			
16707301	40.80 – 44.00	1.60 – 1.73			
16704719	42.30 – 45.50	1.66 – 1.79			
16707536	43.80 – 47.00	1.72 – 1.85			
16707479	45.30 – 48.50	1.77 – 1.90			
16707304	46.80 – 50.00	1.84 – 1.96			
16707480	48.30 – 51.50	1.90 – 2.02			
16707537	49.80 – 53.00	1.96 – 2.08			
16707477	51.30 – 54.50	2.01 – 2.14			
16707700	52.80 – 56.00	2.07 – 2.20			
16707701	54.30 – 57.50	2.13 – 2.26			
16707540	55.80 – 59.00	2.19 – 2.32			
16707372	57.30 – 60.50	2.25 – 2.38			
16707702	58.50 – 62.00	2.30 – 2.44			

167 Series, 9mm Band Width (Continued)

Part Number	Range (mm) Close - Open	Range (inch) Close - Open	Ear Width (Inside)	Band Thickness	Band Width
16707703	60.30 – 63.50	2.37 – 2.50	10mm	0.6mm	9mm
16707518	61.80 – 65.00	2.43 – 2.55			
16707542	63.30 – 66.50	2.51 – 2.61			
16707357	64.80 – 68.00	2.55 – 2.67			
16707688	66.30 – 69.50	2.61 – 2.73			
16707041	67.80 – 71.00	2.66 – 2.79			
16707704	69.30 – 72.50	2.72 – 3.85			
16707705	70.80 – 74.00	2.78 – 2.91			
16707404	72.30 – 75.50	2.84 – 2.97			
16703915	73.80 – 77.00	2.90 – 3.03			
16703766	75.30 – 75.50	2.96 – 2.97			
16707405	76.80 – 80.00	3.02 – 3.14			
16707543	78.30 – 81.50	3.08 – 3.20			
16707545	78.90 – 83.00	3.10 – 3.26			
16707706	81.30 – 84.50	3.20 – 3.32			
16707707	82.80 – 86.00	3.25 – 3.38			
16707708	84.30 – 87.50	3.31 – 3.44			
16707384	85.80 – 89.00	3.37 – 3.50			
16707710	87.30 – 90.50	3.43 – 3.56			
16707547	88.80 – 92.00	3.49 – 3.62			
16707325	90.30 – 93.50	3.55 – 3.68			
16703916	91.80 – 95.00	3.61 – 3.74			
16707548	93.30 – 96.50	3.67 – 3.79			
16707242	94.80 – 98.00	3.73 – 3.85			
16707711	96.30 – 99.50	3.79 – 3.91			
16707713	97.80 – 101.00	3.85 – 3.97			
16707714	99.30 – 102.50	3.90 – 4.03			
16707385	100.80 – 104.00	3.96 – 4.09			
16703918	102.30 – 105.50	4.02 – 4.15			
16707715	103.80 – 107.00	4.08 – 4.21			
16706709	105.30 – 108.50	4.14 – 4.27			
16707716	106.80 – 110.00	4.20 – 4.33			
16707717	108.30 – 111.50	4.26 – 4.38			
16707718	109.80 – 113.00	4.32 – 4.44			
16707719	111.30 – 114.50	4.38 – 4.50			
16707178	112.80 – 116.00	4.44 – 4.56			
16707179	114.30 – 117.50	4.50 – 4.62			
16707720	115.80 – 119.00	4.55 – 4.68			
16707276	117.30 – 120.50	4.61 – 4.74			

Oetiker® 101 Group Double Ear Clamps

Double Ear Clamps offer a wider clamping range as well as elastic properties. The 101 Group's elastic properties enable consistent clamping force in environments with high vibration and large temperature shifts.

- Burr-free edges reduce damage to hoses being clamped
- Narrow width concentrates clamping force
- Suitable for Tubing or Hose
- Composed of Zinc-Plated Steel

Selection: Measure the outside diameter (O.D.) of the hose to be clamped. Select a clamp with an average size range that is close to the hose's O.D. An optimal clamp size will allow the hose's O.D. to fall in the middle of the clamp's size range.

Clamping Procedure: After assembling the hose, use an Oetiker® ear clamping tool to compress the clamp's first ear, followed by clamping the second. The clamp's ears should be reduced in size by at least 40% to provide enough clamping force. If sized correctly, the clamp's ears should not close completely during compression

Note: All Clamps sold in Bag Quantities of 100

101 Series

Part Number	Range (mm) Close - Open	Range (inch) Close - Open	Ear Width (Inside)	Band Thickness	Band Width
10100000	3.10 – 4.10	0.12 – 0.16	N/A	0.5mm	3.5mm
10100001	3.50 – 4.50	0.13 – 0.17		0.6mm	
10100002	3.40 – 5.00	0.13 – 0.19		0.7mm	5mm
10100004	5.00 – 7.00	0.19 – 0.27			6mm
10100008	7.00 – 9.00	0.27 – 0.35		1.0mm	7mm
10100011	8.00 – 11.00	0.31 – 0.43			
10100016	11.00 – 13.00	0.43 – 0.51			
10100019	12.50 – 15.00	0.49 – 0.59			
10100022	14.00 – 17.00	0.55 – 0.66		1.2mm	8mm
10100024	15.00 – 18.00	0.59 – 0.70			
10100097	16.00 – 19.00	0.62 – 0.74			
10100027	16.00 – 20.00	0.62 – 0.78			8.5mm
10100029	18.00 – 22.00	0.70 – 0.86		1.5mm	9mm
10100030	19.00 – 23.00	0.74 – 0.90			
10100032	21.00 – 25.00	0.82 – 0.98			10mm
10100034	22.50 – 27.00	0.88 – 1.06			
10100035	24.00 – 28.00	0.94 – 1.10			
10100037	26.30 – 31.00	1.03 – 1.22			
10100041	29.30 – 34.00	1.15 – 1.33			
10100043	32.00 – 37.00	1.25 – 1.45			
10100045	35.00 – 40.00	1.37 – 1.57			
10100047	37.60 – 43.00	1.48 – 1.69			
10100049	40.60 – 46.00	1.59 – 1.81			

Otiker® 155 Group Single Ear Clamps with Mechanical Interlock

These single ear clamps provide a mechanical interlock, rather than a standard spot weld. This mechanical interlock furthers enhances durability and corrosion resistance.

- Burr-free edges reduce damage to hoses being clamped
- Suitable for Tubing or Hose
- Stainless Steel Construction

Selection: Measure the outside diameter (O.D.) of the hose to be clamped. Select a clamp with an average size range that is close to the hose's O.D. An optimal clamp size will allow the hose's O.D. to
fall in the middle of the clamp's size range.

Clamping Procedure: After assembling the hose, use an Oetiker® ear clamping tool to compress the clamp's ear. The clamp's ear should be reduced in size by at least 40% to provide enough clamping force. If sized correctly, the clamp's ear should not close completely during compression.

Note: All clamps sold in bag quantities of 100

155 Series

Part Number	Range (mm) Close - Open	Range (inch) Close - Open	Ear Width (Inside)	Band Thickness	Band Width
15500000	8.90 – 10.50	0.35 – 0.41	5.0mm	0.6mm	7mm
15500001	9.70 – 11.30	0.38 – 0.44			
15500002	10.40 – 12.30	0.40 – 0.48	6.0mm		
15500003	11.40 – 13.30	0.44 – 0.52			
15500004	11.90 – 14.00	0.46 – 0.55	6.5mm		
15500005	12.60 – 14.50	0.49 – 0.57	6.0mm		
15500006	13.50 – 15.70	0.53 – 0.61	6.5mm		
15500007	15.10 – 17.00	0.59 – 0.66	6.0mm		
15500008	15.70 – 18.50	0.61 – 0.72	7.0mm		
15500009	17.00 – 19.80	0.66 – 0.77	6.0mm		
15500010	18.20 – 21.00	0.71 - 0.82	9.0mm		
15500011	19.80 – 22.60	0.77 – 0.88			
15500012	21.30 – 24.10	0.83 – 0.94			
15500013	22.80 – 25.60	0.89 – 1.00			
15500014	24.00 – 27.10	0.94 – 1.06			
15500015	25.50 - 28.60	1.00 – 1.12			
15500016	27.00 – 30.10	1.06 – 1.18	10mm		
15500017	28.50 – 31.60	1.12 – 1.24			
15500018	30.00 – 33.10	1.18 – 1.30			
15500019	31.50 – 34.60	1.24 – 1.36			
15500020	33.00 – 36.10	1.29 – 1.42			
15500021	34.50 – 37.60	1.35 – 1.48			
15500022	35.00 – 38.10	1.37 – 1.50			
15500023	36.50 – 39.60	1.43 – 1.55			
15500024	37.90 – 41.00	1.49 – 1.61			
15500025	39.40 – 42.50	1.55 – 1.67			
15500026	40.90 – 44.00	1.61 – 1.73			
15500027	42.40 – 45.50	1.66 – 1.79			
15500028	43.90 – 47.00	1.72 – 1.85			
15500029	45.40 – 48.50	1.78 – 1.90			
15500030	46.90 – 50.00	1.84 – 1.96			
15500031	48.40 – 51.50	1.90 – 2.02			
15500032	49.90 – 53.00	1.96 – 2.08			

155 Series (Continued)

Part Number	Range (mm) Close - Open	Range (inch) Close - Open	Ear Width (Inside)	Band Thickness	Band Width
15500033	51.40 – 54.50	2.02 – 2.14	10mm	0.6mm	7mm
15500034	52.90 – 56.00	2.08 – 2.20			
15500035	54.40 – 57.50	2.14 – 2.26			
15500036	55.90 – 59.00	2.20 – 2.32			
15500037	57.40 – 60.50	2.25 – 2.38			
15500038	58.90 – 62.00	2.31 – 2.44			
15500039	60.40 – 63.50	2.37 – 2.50			
15500040	61.90 – 65.00	2.43 – 2.55			
15500041	63.40 – 66.50	2.49 – 2.61			
15500042	64.90 – 68.00	2.55 – 2.67			
15500043	63.40 – 66.50	2.49 – 2.61			
15500044	64.90 – 68.00	2.55 – 2.67			
15500045	66.40 – 69.50	2.61 – 2.73			
15500046	67.90 – 71.00	2.67 – 2.79			
15500047	69.40 – 72.50	2.73 – 2.85			
15500048	70.90 – 74.00	2.79 – 2.91			
15500049	72.40 – 75.50	2.85 – 2.95			
15500050	73.90 – 77.00	2.90 – 3.03			
15500051	75.40 – 78.50	2.96 – 3.09			
15500052	76.90 – 80.00	3.01 – 3.14			
15500053	78.40 – 81.50	3.08 – 3.20			
15500054	79.90 – 83.00	3.14 – 3.26			
15500055	81.40 – 84.50	3.20 – 3.32			
15500056	82.90 – 86.00	3.26 – 3.38			
15500057	84.40 – 87.50	3.32 – 3.44			
15500058	85.90 – 89.00	3.38 – 3.50			
15500059	87.40 – 90.50	3.44 – 3.56			
15500060	88.90 – 92.00	3.50 – 3.62			
15500061	90.40 – 93.50	3.55 – 3.68			
15500062	91.90 – 95.00	3.61 – 3.74			
15500063	93.40 – 96.50	3.67 – 3.79			
15500064	94.90 – 98.00	3.73 – 3.85			
15500065	96.40 – 99.50	3.79 – 3.91			
15500066	97.90 – 101.00	3.85 – 3.97			
15500067	99.40 – 102.50	3.91 – 4.03			
15500101	100.90 – 104.00	3.97 – 4.09			
15500068	102.40 – 105.50	4.03 – 4.15			
15500102	103.90 – 107.00	4.09 – 4.21			
15500103	105.40 – 108.50	4.14 – 4.27			
15500104	106.90 – 110.00	4.20 – 4.33			
15500105	108.40 – 111.50	4.26 – 4.38			
15500106	109.90 – 113.00	4.32 – 4.44			
15500107	111.40 – 114.50	4.39 – 4.50			
15500069	112.90 – 116.00	4.44 – 4.56			

Otiker® 151 Group Stainless Steel Double Ear Clamps

Double Ear Clamps offer a wider clamping range as well as elastic properties. The 151 Group's elastic properties enable consistent clamping force in environments with high vibration and large temperature shifts.

- Burr-free edges reduce damage to hoses being clamped
- Narrow width concentrates clamping force
- Suitable for Tubing or Hose
- Composed of Stainless Steel

Selection: Measure the outside diameter (O.D.) of the hose to be clamped. Select a clamp with an average size range that is close to the hose's O.D. An optimal clamp size will allow the hose's O.D. to fall in the middle of the clamp's size range.

Clamping Procedure: After assembling the hose, use an Oetiker® ear clamping tool to compress the clamp's first ear, followed by clamping the second. The clamp's ears should be reduced in size by at least 40% to provide enough clamping force. If sized correctly, the clamp's ears should not close completely during compression.

Note: All Clamps sold in Bag Quantities of 100

151 Series

Part Number	Range (mm) Close - Open	Range (inch) Close - Open	Ear Width (Inside)	Band Thickness	Band Width
15100000	3.10 – 4.10	0.12 – 0.18	N/A	0.5mm	3.5mm
15100001	3.50 – 4.50	0.13 – 0.17		0.6mm	
15100002	3.40 – 5.00	0.13 – 0.19		0.7mm	5mm
15100003	5.00 – 7.00	0.19 – 0.27			6mm
15100004	7.00 – 9.00	0.27 – 0.35		1.0mm	7mm
15100006	11.00 – 13.00	0.43 – 0.51			
15100007	12.50 – 15.00	0.49 – 0.59			
15100008	14.00 – 17.00	0.55 – 0.66		1.2mm	8mm
15100009	15.00 – 18.00	0.59 – 0.70			
15100010	16.20 – 20.00	0.63 – 0.78			8.5mm
15100011	18.10 – 22.00	0.71 – 0.86		1.5mm	9mm
15100012	19.10 – 23.00	0.75 – 0.90			
15100013	21.10 – 25.00	0.83 – 0.98			10mm
15100014	22.50 – 27.00	0.86 – 1.06			
15100015	24.00 – 28.00	0.94 – 1.10			
15100016	26.30 – 31.00	1.03 – 1.22			
15100018	29.30 – 34.00	1.15 – 1.33			
15100019	32.00 – 37.00	1.25 – 1.45			
15100020	35.00 – 40.00	1.37 – 1.57			
15100021	37.60 – 43.00	1.48 – 1.69			
15100022	40.60 – 46.00	1.59 – 1.81			

Otiker® 153 Group, Stainless, Single Ear Clamps

These single ear clamps are composed of stainless steel, providing enhanced corrosion resistance.

- Burr-free edges reduce damage to hoses being clamped
- Stainless Steel Construction
- Suitable for Tubing or Hose

Selection: Measure the outside diameter (O.D.) of the hose to be clamped. Select a clamp with an average size range that is close to the hose's O.D. An optimal clamp size will allow the hose's O.D. to fall in the middle of the clamp's size range.

Clamping Procedure: After assembling the hose, use an Oetiker® ear clamping tool to compress the clamp's ear. The clamp's ear should be reduced in size by at least 40% to provide enough clamping force. If sized correctly, the clamp's ear should not close completely during compression.

Note: All Clamps sold in Bag Quantities of 100

153 Series

Part Number	Range (mm) Close - Open	Range (inch) Close - Open	Ear Width (Inside)	Band Thickness	Band Width
15300000	2.90 – 3.30	0.11 – 0.12	1.4mm	0.5mm	3mm
15300001	3.00 – 3.50	0.11 – 0.13			
15300002	3.30 – 4.10	0.12 – 0.16	2.5mm		4mm
15300054	3.80 – 4.60	0.14 – 0.18	3.0mm		
15300003	4.10 – 5.10	0.16 – 0.20	3.2mm		
15300055	4.60 – 5.60	0.18 – 0.22			
15300004	5.10 – 6.10	0.20 – 0.24			
15300005	5.60 – 6.60	0.22 – 0.25			
15300006	6.10 – 7.00	0.24 – 0.27	3.0mm		5mm
15300007	6.50 – 7.50	0.25 – 0.29	3.5mm		
15300008	6.80 – 8.00	0.26 – 0.31	4.0mm		
15300009	7.10 – 8.30	0.27 – 0.32			
15300010	7.50 – 8.70	0.29 – 0.34			
15300011	7.50 – 9.00	0.29 – 0.35	5.0mm		
15300012	8.10 – 9.50	0.31 – 0.37		0.7mm	6mm
15300013	8.50 – 10.00	0.33 – 0.39			
15300014	9.10 – 10.50	0.35 – 0.41			
15300015	9.30 – 11.00	0.36 – 0.43	5.5mm		
15300016	9.60 – 11.30	0.37 – 0.45			
15300017	10.10 – 11.80	0.39 – 0.46			
15300018	10.10 – 12.00	0.39 – 0.47	6.5mm		
15300019	10.30 – 12.30	0.40 – 0.48			
15300020	10.80 – 12.80	0.42 – 0.50			
15300021	11.30 – 13.30	0.44 – 0.52		0.8mm	

153 Series (Continued)

Part Number	Range (mm) Close - Open	Range (inch) Close - Open	Ear Width (Inside)	Band Thickness	Band Width
15300022	11.80 – 13.80	0.46 – 0.54	6.5mm	0.8mm	6mm
15300023	12.00 – 14.00	0.47 – 0.55			
15300024	12.50 – 14.50	0.49 – 0.57			
15300025	13.00 – 15.00	0.51 – 0.59			
15300026	13.50 – 15.50	0.53 – 0.61			
15300027	13.80 – 16.00	0.54 – 0.62	7.0mm		
15300028	14.00 – 16.50	0.55 – 0.64	8.0mm		
15300029	14.60 – 16.80	0.57 – 0.66	7.0mm		
15300030	15.30 – 17.50	0.60 – 0.68			
15300031	16.30 – 18.50	0.64 – 0.72			
15300032	17.20 – 19.50	0.67 – 0.76	7.5mm		
15300033	17.70 – 20.00	0.69 – 0.78			
15300034	17.90 – 20.70	0.70 – 0.81	9.0mm		
15300035	18.70 – 21.00	0.73 – 0.82	7.5mm	1mm	7mm
15300036	19.50 – 21.80	0.76 – 0.85			
15300037	19.90 – 22.50	0.78 – 0.88	8.5mm		
15300038	21.00 – 23.50	0.82 – 0.92			
15300040	21.70 – 24.50	0.85 – 0.96	9.0mm		
15300041	22.70 – 25.50	0.89 – 1.00			
15300043	23.60 – 26.30	0.91 – 1.03	8.5mm		
15300044	24.10 – 27.00	0.94 – 1.06	9.5mm		
15300045	27.20 – 30.70	1.07 – 1.20	11.0mm		

Oetiker® Clamp Kits

18500056 – Service Clamp Kit with Standard Jaw Pincers

Contains the Following:

Item	Quantity
2 Ear Clamp , 9mm (5/16”)	15
2 Ear Clamp , 11mm (3/8”)	15
2 Ear Clamp , 13mm (1/2”)	15
2 Ear Clamp , 15mm (9/16”)	15
2 Ear Clamp, 18mm (5/8”)	15
2 Ear Clamp , 20mm (3/4”)	12
2 Ear Clamp , 23mm (7/8”)	12
2 Ear Clamp , 25mm (15/16”)	12
2 Ear Clamp , 27mm (1”)	12
Standard Jaw Pincer	1

18500060 – Stepless® Ear Clamp Kit

Contains the Following:

Item	Quantity
Stepless® Clamp, 13.3mm (1/2”)	10
Stepless® Clamp, 14.5mm (9/16”)	10
Stepless® Clamp, 15.7mm (5/8”)	10
Stepless® Clamp, 18.5mm (23/32”)	10
Stepless® Clamp, 22.6mm (7/8”)	10
Stepless® Clamp, 28.6mm (1 1/8”)	10
Stepless® Clamp, 31.6mm (1 1/4”)	10
Standard Jaw Pincer	1

18500075 – Stepless® Beverage Service Kit

Contains the Following:

Item	Quantity
Stepless® Clamp, 8.7mm (11/32”)	50
Stepless® Clamp, 10.5mm (13/32”)	50
Stepless® Clamp, 11.3mm (7/16”)	50
Stepless® Clamp, 13.3mm (1/2”)	50
Stepless® Clamp, 14.5mm (9/16”)	50
Stepless® Clamp, 17.0mm (11/16”)	50
Standard Jaw Pincer	1

18500106 – Welding Hose Repair Kit

Contains the Following:

Item	Quantity
“B” RH Brass Oxygen Nuts	6
“B” LH Brass Acetylene Nuts	6
1/4” Brass Nipples	6
3/16” Brass Nipples	2
3/16” Brass Hose Menders	2
1/4” Brass Hose Menders	4
9/16” (15mm) Twin Clamps	4
2 Ear Clamps, 1/2” (13mm)	10
2 Each Clamps, 9/16” (15mm)	40
Standard Jaw Pincer	1

Oetiker® Ear Clamp Installation Tools

Clamp installation tools from Oetiker will provide consistent and even pressure around hose barbs.

Model	Action	Jaw Style
14100386	Compound	Standard (Front)
14100387	Compound	Side (Front & Side)
14100396	Single	Standard (Front)

14100386

14100387

14100396

Standard Jaw (Front)

Side Jaw (Front & Side)

Standard Jaw (Front)

Tubing & Hose Cutters

Tubing & Hose Cutters

Tubing and hose cutters from ATP ensure clean and square cuts.

TC-14

A compact and durable cutter constructed of a tough reinforced plastic. Suitable for tubing and hose from 1/8” to 1/2” OD (3mm-12mm)

TC-14RPK

5 Pack of carbon steel replacement blades.

TC-100

A high quality, large capacity cutter capable of sizes through 1” (25.4mm)

TC-100 BLADE

A single PTFE coated steel replacement blade.

ETC-20

Unique tubing and hose cutter equipped with a 1m tape measure. Rotatable 5 sided blade allows for longer blade service life.

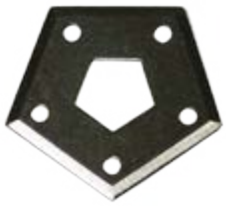

ETC-20RPK

A Single 5 sided replacement blade.

TechniCut™

TC-200

The TechniCut™ Premium Hose and Tubing Cutter features a patented design that provides straight, repeatable cuts up to 1″ O.D.

The shape and design of the cutter differs from others in that it does not engage the tube via the blade's point, rather the edge.

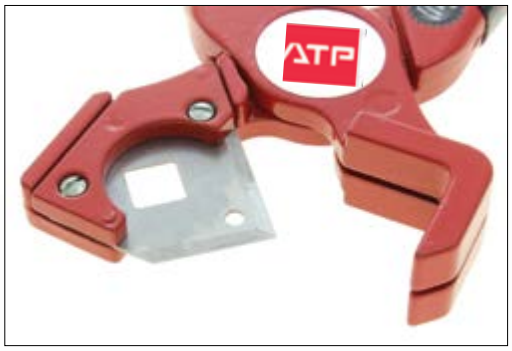

- Suited for Production Settings
- All-Metal Design
- Soft Grips Ensure user Comfort
- Replaceable Blade
- Made in USA

TC-200 BLADE

Replacement Blade for TechniCut™ TC-200

MADE IN USA

Hose Reels & Balancers

Specifications	
Maximum Pressure	150 psi
Media	Compressed Air
Inlet Thread	Female
Outlet Thread	Male
Hose Construction	Polyurethane
Temperature Range	14°F to 113°F

TechniReel™

Setup a workspace for efficiency and safety with TechniReel™

TechniReel™ Hose Reels enable workstations to be kept clear of potentially dangerous trip hazards. When not in use, the hose is stored within the reel.

TechniReel™ Hose Reels can be equipped with the **Safety-Wind™** Controlled-Return System, allowing for a steady rewind of the hose into the reel. The **Safety-Wind™** feature is available on select reels with a simple installation consisting of 3 screws. The steady, controlled return of the Safety-Wind™ eliminates the rapid and often uninhibited return seen in other units.

The design of the TechniReel™ Hose Reels enables serviceability. The springs are in a self-contained unit, allowing for cleaning and service, without the need to rewind like other units. The plastic housing will not rust when compared to steel housings, and are UV-Resistant allowing for outdoor use.

All TechniReel™ units can be mounted vertically or horizontally with the supplied swiveling steel mounting bracket

Features:

- Shock-Resistant Plastic Housing
- UV-Resistant Housing, Suitable for Outdoor Use
- Carbon Steel Spring for Long-Term Durability
- Serviceable and Cleanable
- Steel Wall-Mounting Bracket
- Automatic Spring Rewind System

Safety-Wind™

Hose Reels

Model	Hose ID	Hose Length	Threads	Safety-Wind™ Equipped?	Depth	Height	Width	Weight
TR14-20	3/16"	20'	1/4" NPT	Not Available	8.8in (225mm)	7.0in (180mm)	5.1in (130mm)	2.6lb (1.2 kg)
SHR14-30	1/4"	30'	1/4" NPT	Yes	12.2in (310mm)	10.4in (265mm)	6.4in (165mm)	6.6lb (3.0 kg)
HR14-30				No				
SHR14-50		50'		Yes	15.5in (395mm)	12.4in (315mm)	8.8in (225mm)	9.0lb (4.1 kg)
HR14-50				No				
SHR38-25	3/8"	25'	3/8" NPT	Yes	15.5in (395mm)	12.4in (315mm)	8.8in (225mm)	9.0lb (4.1 kg)
HR38-25				No				
SHR38-50		50'		Yes	17.7in (450mm)	13.1in (335mm)	7.2in (185mm)	11.0lb (5.0kg)
HR38-50				No				
HR12-50	1/2"	50'	1/2" NPT	Not Available	20.8in (530mm)	16.7in (425mm)	8.2in (210mm	18.2lb (8.3 kg)

Safety-Wind™ Controlled-Return Kits

Model	Installed On
SM14-30	HR14-30
SM14-50	HR14-50
SM38-25	HR38-25
SM38-50	HR38-50

Hose Balancers

Hose Balancers help create a clean and efficient workstation and enabling users to position air tools above a workstation and in an ideal location. Hose balancers can be adjusted to allow a pneumatic tool to remain in a location after being placed by a user, this is critical for ergonomics and repeatability in assembly applications.

MHB "Mega Hose Balancer" Series

The Mega Hose Balancer is a robust die-cast aluminum design that offers varying tool weight and hose length options.

- Tested to 300,000 cycles
- Equipped with Braided-Polyurethane Hose
- Large Knob Style Adjuster does not Require Tools
- Increase Efficiency and Productivity
- Reduce Workspace Clutter

Specifications	
Media	Compressed Air
Max Working Pressure	143psi (10 Bar)
Temperature Range	32°F to 142°F
Hose Style	5/16" ID (8x10.5mm) Braided Polyurethane
Inlet Connection	3/8" Male NPT
Outlet Connection (Hose)	1/4" Female NPT
Item Weight	5.5lb (2.5kg)
Body Construction	Die-Cast Aluminum

Mega Hose Balancers

Model	Tool Capacity	Hose Length
MHB-83	2.2 – 6.6 lb (1 - 3kg)	50" (1,3m)
MHB-84		72" (1,9m)
MHB-85	6.6 – 11.0 lb (3 - 5kg)	40" (1,0m)
MHB-86		72" (1,9m)

LR-09 "Light-Duty" Hose Balancer

Lightweight plastic body and compact design are suitable for workstations and light-duty applications. Dial-type torque adjustment. Flexible polyurethane hose for ergonomic operator comfort. Two hose lengths are available. Spring guard is included.

Specifications	
Media	Compressed Air
Max Working Pressure	140psi (10 Bar)
Temperature Range	32°F to 142°F
Hose Style	5 x 8mm Polyurethane
Inlet Connection	1/4" Female NPT
Outlet Connection (Hose)	1/4" Male NPT
Item Weight	1.87lb (0.85kg)
Body Construction	Plastic

Light Duty Balancers

Model	Tool Capacity	Hose Length
LR-09	3.3 lbs (1.5kg)	35" (0,9m)
LR-09B-200		78" (2,0m)

Cable Balancers

Cable Balancers help create a clean and efficient workspace by enabling users to position tools above a workspace and in an ideal location. Cable balancers can be adjusted to allow any tool to remain in a location after being placed by a user, this is critical for ergonomics and repeatability in assembly applications.

- Tested at 500,00 Cycles
- Nylon Coated Cable
- Increase Efficiency and Productivity
- Reduce Workspace Clutter

Model	Tool Capacity	Wire Length	Balancer Weight	Adjustment Style	Body Material
STB-30	3.3 – 6.6 lb (1.5 – 3.0kg)	50" (1,3m)	2.6 lbs (1,3kg)	Tension Key	Plastic
STB-30-2		78" (2,0m)	2.9 lbs (1,4kg)		
STB-50	6.6 – 11.0 lb (3.0 – 5.0kg)	50" (1,3m)	2.9 lbs (1,3kg)	Tension Key	Plastic
STB-50-2		78" (2,0m)	3.3 lbs (1,5kg)		
TB-10	1.1 – 3.3 lb (0.5 – 1.5kg)	20" (0,5m)	0.6 lbs (0,3kg)	Knob Style	ABS Plastic
TB-15		40" (1,0m)	1.4 lbs (0,5kg)		

Compressed Air Blowguns

Compressed Air Blowguns

Composite Pistol Grip Blowguns

Composite Pistol Grip Blowguns feature a lightweight, plastic construction.

Model	Tip	Sound Level	Temperature Range	Inlet	Working Pressure	Body Material	OSHA Compliant?
BK9405-5HD*	4" Fixed	76 dBa	-4°F to 158°F	1/4" Female NPT	90-120 psi	POM	No
AR501-F-L100	4" Flexible	N/A	-4°F to 158°F	1/4" Female NPT	90-120 psi	POM	Yes
AR501-F-L200	8" Flexible	N/A	-4°F to 158°F	1/4" Female NPT	90-120 psi	POM	Yes
AR501-F-L300	12" Flexible	N/A	-4°F to 158°F	1/4" Female NPT	90-120 psi	POM	Yes
AR501-F-L500	20" Flexible	N/A	-4°F to 158°F	1/4" Female NPT	90-120 psi	POM	Yes

***Note: For the above blowgun to be OSHA Compliant, the inlet air supply should be regulated to 30psi.**

Palm Type Blowgun

Palm Type Blow Guns provide an all metal lever operated unit in a small, tough package.

Model	Tip	Sound Level	Temperature Range	Inlet	Working Pressure	Body Material	OSHA Compliant?
BK9407-HDS	Bypass Style	N/A	32°F to 140°F	1/4" Female NPT	0-150 psi	Zinc-Plated Brass	Yes

All-Metal Pistol Grip Blowguns

All-Metal Pistol Grip Blowguns provide comfortable ergonomics with durable construction.

Model	Tip	Sound Level	Temperature Range	Inlet	Working Pressure	Body Material	OSHA Compliant?
K601-03	6" Fixed	83.7 dBa	32°F to 140°F	1/4" Female NPT	0-150 psi	Plated Brass	No
10K601-ARS	Vibro Nozzle	90.6 dBa	41°F to 140°F	1/4" Female NPT	0-150 psi	Plated Brass	Yes

Compressed Air Blowguns

Prevost 27202 Compressed Air Blowguns

Model	Tip	Sound Level	Temperature Range	Inlet	Working Pressure	Body Material	Consumption @ 87 psi	OSHA Compliant?
27202 OSHA	Permanent OSHA	90 dBa	5°F to 158°F	1/4" Male NPT	145 psi	Composite	7.7 scfm	Yes
27202 SIL	Silent Nozzle	77 dBa	-4°F to 158°F	1/4" Female NPT	90-120 psi	POM	6.8 scfm	Yes
27202 ECR	Protective Curtain	82 dBa	-4°F to 158°F	1/4" Female NPT	90-120 psi	POM	13.8 scfm	Yes
27202 MTL	Metal Nozzle	83 dBa	-4°F to 158°F	1/4" Female NPT	90-120 psi	POM	13.5 scfm	Yes

27202 OSHA

27202 SIL

27202 ECR

27202 MTL

Blowgun Nozzles

CRN250-BPN Blowgun Nozzle
OSHA Compliant removable nozzle for the BK9405-5HD Blowgun.

10K-ARS Vibro Air Nozzle
The Vibro Air Nozzle features a pulsing action, allowing for increased performance, with reduced air consumption.

Available in standard 1/8" parallel blowgun nozzle thread.

Index

Item	Page	Item	Page
1101 _ _ _ _ _	263	24-DS_	230
10K601-ARS	280	24-DS_-NPT	230
10K-ARS	281	24-DS_-SUS303	234
12BC-N_ _	241	24-SO	231
12DF-N_ _	239	24-SO	231
14100_ _ _	271	27202-_ _ _	281
14BC-_B	241	295 00 _ _ _	244
14BC-N_ _	241	2LE_ _ _	20
14DF-N_ _	239	2MP-_ _ _-_-0_	37
14PA-N_ _	236	2MPS-_ _ _-_ _-0_	44 & 45
14PIC- _ _	228	2MS_ __	22 & 23
14PI-N_ _	236	38BC-N_ _	241
14PT-N_ _	236	38DF-N_ _	239
14SIC-_ _	225	38PIC- _ -	228
14SI-N_ _	235	38PI-N_ _	236
14SOC- _ _	226	38SIC-_ _	225
151 _ _ _ _ _	266 - 268	38SI-N_ _	235
155 _ _ _ _ _	264 & 265	38SOC- _ _	226
167_ _ _ _ _	258 -262	3MP-_ _ _-_ _-0_	39
185 _ _ _ _ _	269 & 270	3MPS-_ _ _-_ _	46 & 47
1N-_ _ _-_ _ - _	213 - 215	3MPS-_ _ _-_ _	46 & 47
1PS-_ _ _-_ _ - _	210- 212	3USC-H14	242
205 00 _ _ _	243	3USC-N2_	242
22-DF_-SUS303	234	4MP-_ _ _-_ _-0_	40
22-DP_-_ _	231	4MPS-_ _ _-_ _	48 & 49
22-DS_-_ _ _	230	4MPS-_ _ _-_ _	48 & 49
22-DS_-SUS303	234	50-DPC	231
22-SO_	231	50-SOC	231
23-DF_-SUS303	234	5SOC- _ _	229
23-DP_	231	65-DPC	231
23-DP_-NPT	231	65-SOC	231
23-DS_	230	80-DPC	231
23-DS_-NPT	230	80-SOC	231
23-DS_-SUS303	234	AR501-F-L_00	280
23-SO	231	AT-_ _ -_ _-CB-_	208 & 209
23-SO	231	Auto-100_-_	200
24-DF_-SUS303	234	B_ _-_ _FL	155
24-DP_	231	B_ _-_ _FL-PT	155
24-DP_-NPT	231	B_ _-_ _F-PP	151

Index

Item	Page
B_ _-_ _MBJ	162
B_ _-_ _MBJ-PT	162
B_ _-_ _ML	152
B_ _-_ _ML-PP	153
B_ _-_ _ML-PT	153
B_ _-_ _MLR	154
B_ _-_ _MLR-PT	154
B_ _-_ _MT	156
B_ _-_ _MT-PP	156
B_ _-_ _MT-PT	156
B_ _-_ _R	160
B_ _-_ _RT	157
B_ _-_ _RT-PP	157
B_ _-_ _RT-PT	157
B_ _-_ _SA	161
B_ _-_ _SA-PT	161
B_ _-_ _UY	159
B_ _-0_F	151
B_ _-0_M	149
B_ _-0_M-PP	150
B_ _-0_M-PT	150
B_ _BU	163
B_ _MBU	163
B_ _MU	158
B_ _MUL	158
B_ _MUT	159
B_ _U	158
B_ _UL	158
B_ _UT	159
B_ _UY	159
BC-2_	241
BC-3_	241
BK9405-_ _ _	280
BSC_ _-_ _DC-O	164
BSC_ _-_ _HA-O	165
BU0_-0_	249
BWM-0_	252
HCJ_ _ __	188
HCJB _ _ _	187
BWM-0_-PT	252
CAS_ _	108
CRN250-BPN	281
CVFF_ _-_ _	148
CVPC_ _-_ _	146
CVPF-_ _-_ _	147
CVPU_ _	147
DF_ _	240
DF02_	240
DF03_	240
DF04_	240
DF110	240
DWPE_ _ __	15 & 16
ESC_ _-_ _	137
ETC-20	273
FBT0_-0_	248
FC0_-0_	247
FCC0_-0_	247
FE_F-_M	255
FEN_F-N_M	255
FEP_ _MANA	18
FL0_-0_	248
FT0_-0_	249
H11-__SBR	220
H12-__SBR	220
H1332-__SBR	220
H14-__SBR	220
H2164-__SBR	220
H38-__SBR	220
H5-__SBR	220
H6.5-__SBR	220
H8-__SBR	220
HBM_ _-0_	251
HBVU_ _ _ _	193
HCAS-_ __	196
HCBB_ _ _ _	187
HCF_ _ __	178
HCJB	187
HCP_ _	195
HCVU_ _ _ _	192

Index

Item	Page	Item	Page
HFPC- _ _	228	MCL0_-_ _	247
HFSOC- _ _	226	MFC0_-0_	250
HGJ_ _ _ _	190	MHB-8 _	277
HHP0_	250	ML0_-0_	248
HLJ_ _ _ _	189	MLA-_	253
HMM_ _ _ _	191	MS_ _ _ _	22 & 23
HPC_ _ __	177	MYA-_	253
HPC_ __ _ _	177	N_ _ -Spring	221
HPF_ _	191	N04M/532_ _	12 & 13
HPL_ _ _ _	179	N06M_ _	13
HPP_ _	192	N08M/516_ _	12 & 13
HR14-_0 Yes	276	N10M_ _	13
HR38-_ _	276	N12_ _	12
HRPL_ _ _ _ _	180	N12-4MU	221
HRPT_ _ _ _	181	N14_ _	12
HRST_ _ _ _	182	N14-2MU	221
HRWT_ _ _ _	183	N14x150_ _	12
HSLB_ _ _ _	193	N18_ _	12
HSLU_ _ _ _	194	N38_ _	12
HSTB_ _ _ _	194	N38-_MU	221
HSTU_ _ _ _	195	N38x215_ _	12
HSV-_ _	141	N58_ _	12
HUC_ _ _ _	184	NFA_M-_M	254
HUFFG0_-G0_	196	NFAB-N_M-_	254
HUL_ _ _ _	185	NFAN2F-N_M	254
HUT_ _ _ _	186	NFAN3F-N_M	254
HUY_ _ _ _	186	NFAP-2M-_ _	237
HVC-_ _- _ _	139	NFAP-N_M-UA	237
HVF-_ _-_ _	140	NFAP-N_M-UB	237
HVM-_ _-_ _	142	NFAP-N2M-_ _	237
HVU_ _-_ _	141	NS-12-_ _-_	205
HZA0606	189	NS-14-_ _-_	205
K601-03	280	NS-38-_ _-_-0_	205
LE_ _ _ _ _	20	NSC_ _-_ _	123 & 124
LR-09	277	NSC_ _-_ _(D)	125 & 126
LR-09B-200	277	NSC_ _-_ _(DC)	127 & 128
MC0_-0_	246	NSCF0_	137
MCC0_-0_	246	NSCP_ _ -_ _	133 & 134
MCF0_-0_	249	NSF_ _ _	132

Index

Item	Page	Item	Page
NSFB_ _	132	PGT_ _ _ _	91
NSFF-0_	136	PH_ _-_ _	110
NSFP-0_	136	PH_ _-_ _	111
NSS_ _-_ _	129	PHF_ _-_ _	112 & 113
NSS_ _-_ _(D)	130	PHL_ _-_ _ (2)	114
NSS_ _-_ _(DC)	131	PHL_ _-_ _ (3)	115
NSSP_ _-_ _	135	PHT_ _-_ _ (1)	119
PA_ _-_ _	116	PHT_ _-_ _ (2)	120
PAT_ _-_ _ (2)	117	PHT_ _-_ _ (3)	121
PAT_ _-_ _ (3)	118	PIG_ _-_ _	107
PBH_ _ _CB	28	PIJ_ _	106
PBH_ _-_ _ CBDF	29	PKD_ _ _ _-_ _	122
PBH_ _-_ _CB_	28	PKG_ _ _ _	93
PBH_ _-_ _CBBC	29	PKJ_ _-_ _	106
PBH_ _-_ _CBDF	29	PL_ _-_ _C	73
PC_ _-_ _C	62	PL_ _-0_	65
PC_ _-0_	55 - 57	PL_ _-0_	66 & 67
PC_ _-N_	55- 57	PL45 _ _-_ _	74 & 75
PCF_ _-_ _C	64	PLF_ _-_ _	72
PCF_ _-0_	60 & 61	PLF_ _-N_	71
PCF_ _-N_	60 & 61	PLJ_ _	102
PCP_ _	109	PLL_ _-_ _	70
PE04M/532_ _	15 & 16	PLL_ _-_ _C	76
PE06M_ _	16	PLL_ _-N_	68 & 69
PE10M_ _	16	PLM_ _ _	100
PE12__	15	PMF_ _ _ -_ _	99
PE12M_ _	16	PMG_ _ _ _	94
PE14_ _	15	PMM_ _ _	98
PE1418_ _	15	PMM-__C	100
PE18_ _	15	POC_ _-_ _C	63
PE1A_	15	POC1/2-N_	58 & 59
PE34_ _	15	PP_ _	107
PE38_ _	15	PPF_ _	108
PE58_ _	15	PSJ_ _	104
PFM0_	252	PST_ _-_ _	80 - 82
PFM0_-PT	252	PST_ _-_ _C	85
PG_ _ _ _	89	PT_ _-_ _	77 - 79
PG_ _-_ _C	95	PTF_ _ -_ _	82 - 84
PGJ_ _-_ _C	101	PTFE_ _ANA	17

Index

Item	Page	Item	Page
PTFE_ _MANA	17	RHP0_	250
PTJ_ _	103	SBM0_	252
PU04M/532_ _	8	SBM0_-PT	252
PU04M/532_ _	7 & 8	SH11_ _	30
PU06M_ _	8	SH11-_ __3	30
PU08M/516_ _	8	SH-11-N_M-SBR	221
PU10M_ _	8	SH6.5_ _	30
PU12_ _	7	SH6.5-_ __2	30
PU12M_ _	8	SH-6.5-N_M-SBR	221
PU16M_ _	8	SH8_ _	30
PU18_ _	7	SH8-_ __2	30
PU316_ _	7	SH-8-N_M-SBR	221
PU34_ _	7	SHR14-_0	276
PU38_ _	7	SHR38-_ _	276
PU58_ _	7	SM14-_ _	276
PU916_ _	7	SM38-_ _	276
PUC_ _	88	SP-10-_ _-_-_	207
PUL_ _	89	SP-12-_ _-_-_	207
PUL_ _C	96	SP-1332-_ _-_-_	207
PUT_ _	90	SP-14-_ _-_-_	207
PUT_ _C	96	SP-2164-_ _-_-_	207
PUV12_BK	10	SPC_ _-_ _	143 & 144
PUV14_BK	10	SPU_ _	145
PUV38_BK	10	SPU08M/516_ _	9
PVC_ _-_ _ANA	25	SPU12_ _	9
PVCBH_ _-_ _ANA	27	SPU14_ _	9
PVSC_ _-_ _	138	SPU18_ _	9
PVSF0_	148	SPU38_ _	9
PW_ _ _ _	92	SS_ _-_ _F	167
PW_ _-_ _C	97	SS_ _-_ _F-PT	168
PWJ_ _ _ _	105	SS_ _-_ _M	166
PWT_ _ _ _	88	SS_ _-_ _ML	169
PWT_ _-_ _	86 & 87	SS_ _-_ _ML-PT	169
PXG_ _ _ _	93	SS_ _-_ _M-PT	167
PXJ_ _ _ _	105	SS_ _-_ _MR	171
PY_ _ _ _	92	SS_ _-_ _MT	170
PY_ _C	97	SS_ _-_ _MT-PT	170
PYJ_ _	104	SS_ _-_ _UR	171
PZA_ _	94	SS_ _BU	173

Index

Item	Page	Item	Page
SS_ _U	171	STH_ _-_ _CBQ	32
SS_ _UL	172	STH_ _-_BKR	31
SS_ _UL	172	STH12-_MSBR	221
SS_ _UT	172	STH14-2MSBR	221
SS12PI-N_ _	232	STH38-_MSBR	221
SS12SI-N_ _	232	STL0_-0_	248
SS14PI-N_ _	232	T_-1332-_ _-_-_	200 & 202
SS14SI-N_ _	232	T_-14-_ _-_-_	200 & 202
SS38PI-N_ _	232	T_-2164-_ _-_-_	200 & 202
SS38SI-N_ _	232	T_-38-_ _-_-_	200 & 202
ST-10-_ _-_-_	204	TB-1_	278
ST-12-_ _-_-_	204	TB-12-_ _-RS	200 & 202
ST-1332-_ _-_-_	204	TC-100	273
ST-14-_ _-_-_	204	TC-14	273
ST-16-_ _-_-_	204	TC-200	274
ST-2164-_ _-_-_	204	TR12-50	276
ST-316-_ _-_-_	204	TR14-20	276
ST-8-_ _-_-_	204	TT-10- _ _-_-_	201
STB-_0	278	TT-12-_ _-_-_	201
STH_ _-_ _BKR_	31	TT-16-_ _-_-_	201
STH_ _-_ _CBBC	32	TT-316-_ _-_-_	200 & 202
STH_ _-_ _CBDF	32	TT-8-_ _-_-_	201

Chemical Resistance Chart

	Polyurethane	Nylon 12	Polyethylene	PVC	PTFE	Weld Tubing Cover
Acids						
Acetic, 3n	B	E	A	A	A	A
Boric, 4%	B	A	A	A	A	A
Chromic, 3n	D	E	A	A	A	—
Citronic, 3n	B	—	A	A	A	—
Formic, 3n	D	A	A	A	A	A
HC1, 3n	A	E	A	A	A	—
Lactic, 3n	C	B	A	A	A	A
Nitric, 3n	D	E	A	A	A	B
Phosphoric, 3n	D	D	A	A	A	A
Sulfuric, <20%	A	B	A	A	A	A
Sulfuric, >20%	B	C	B	A	A	A
Alkalines						
Ammonia, 3n	A	A	—	A	A	A
Potassium Hydroxide, 3n	A	—	A	A	A	A
Sodium Hydroxide, <20%	A	A	A	A	A	A
Sodium Hydroxide, >20%	C	A	—	A	A	A
Aqueous Solution						
Aluminum Chloride, 10%	B	—	A	A	A	A
Ammonium Chloride, 10%	B	A	A	A	A	A
Bleaching Agent, 40%	A	E	—	—	A	A
Bleaching Agent, 100%	B	E	—	—	A	—
Calcium Chloride, 40%	B	A	A	—	A	—
Caustic Soda, 10%	A	A	—	—	A	—
Ferric Chloride, 10%	B	—	A	A	A	A
Hydrogen Peroxide, 3%	A	A	A	A	A	A
Magnesium Chloride, 30%	B	—	A	A	A	—
Potassium Chloride, 40%	B	A	A	—	A	—
Potassium Dichromate, 10%	B	C	A	—	A	—
Potassium Permanganate, 5%	D	D	A	—	A	—
Sea Water	A	A	A	A	A	—
Sodium Bisulfate, 10%	B	A	A	—	A	—
Sodium Chloride, 10%	B	B	A	—	A	—
Sodium Hypochlorite, PH 13	A	B	A	—	A	A
Fuels						
ASTM Fuel A	A	—	—	B	A	—
ASTM Fuel B	C	—	—	C	A	—
ASTM Fuel C	C	—	—	—	A	—
Diesel Fuel	B	A	—	B	A	D
Gasohol (10-15% Methanol)	D	—	—	—	A	—
High-test (Super) Gasoline	D	A	—	—	A	—
Kerosene	A	V	—	B	A	D
Oils						
ASTM Oil #1	A	—	—	B	A	—
ASTM Oil #2	A	—	—	—	A	—
ASTM Oil #3	A	—	—	B	A	—
Brake Fluid (ATE or ATS)	D	A	—	—	A	
Gear Box Oil (SAE 90)	A	—	—	—	A	—
Hydraulic Fluid	B	—	—	—	A	—
Hydraulic/Water Emulsion	B	—	—	—	A	—
Mineral Oil	A	A	C	A	A	—
Motor Oil	A	A	B	—	A	—
Paraffin Oil	A	A	—	A	A	
Power Steering Fluid	B	—	—	—	A	—
Skydrol® 500 Oil	D	—	—	—	A	B

	Polyurethane	Nylon 12	Polyethylene	PVC	PTFE	Weld Tubing Cover
Greases						
Calcium Grease	A	—	—	—	A	—
Sodium Grease	A	—	—	—	A	—
Teflon® Grease	A	—	—	—	A	—
Miscellaneous						
Dioctyl Phthalate (DOP)	A	—	C	C	A	—
Ethylene Chloride	B	C	D	—	A	D
Ethylene Glycol/Water 50/50	B	—	—	A	A	A
Household Cleaner	B	—	—	—	A	—
Naptha	A	—	A	B	A	D
Silage (Silo) Juice	B	—	—	—	A	—
Natural Perspiration	A	—	—	—	A	—
Tincture of Iodine	D	—	—	—	A	—
Tricresyl Phosphate	D	—	—	C	A	—
Solvents						
Acetone	D	A	D	C	A	B
Aniline	D	B	B	B	A	—
Benzene	D	A	D	C	A	D
Benzyl Alcohol	E	—	—	—	A	B
Butane	B	A	—	—	A	B
Butyl Acetate	D	A	B	C	A	—
Butyl Alcohol	D	A	A	—	A	—
Carbon Tetrachloride	D	A	D	C	A	D
Chlorobenzene	D	C	D	C	A	D
Chloroform	D	C	D	C	A	D
Cyclohexane	C	A	—	A	A	D
Ethanol	C	—	B	—	A	B
Ether	C	A	—	—	A	B
Ethyl Acetate	D	A	C	C	A	A
Freon 11, 12, 22	C	—	—	—	A	D
Glycerine & Glycol	A	A	B	A	A	A
Heptane	B	A	D	B	A	—
Hexane	B	A	—	B	A	—
Isopropyl Alcohol	C	A	—	—	A	—
Methanol	C	—	B	—	A	A
Methyl Acetate	D	—	—	C	A	—
Methyl Ethyl Ketone	C	A	—	C	A	—
Methyl Glycol	D	—	—	—	A	—
Methylene Chloride	D	E	D	C	A	—
N-Methyl Pyrrolidone	E	—	—	—	A	—
Perchloroethylene	D	—	—	C	A	—
Petroleum	B	A	—	—	A	—
Pyridine	E	A	—	—	A	B
Tetrachloroethylene	D	—	—	C	A	—
Tetrahydrofuran	D	B	D	C	A	B
Toluene	D	A	D	C	A	D
Trichloroethylene	D	C	D	C	A	D
Turpentine (Pine Oil)	B	A	C	B	A	B
Xylene	D	A	—	C	A	D

Teflon® is a registered trademark of the Dupont Corporation.
Skydrol® is a registered trademark of Monsanto Company.

A . . . . . Excellent	(0-3%)
B . . . . . Good	(4-15%)
C . . . . . Fair	(16-30%)
D . . . . . Poor	(>30%)
E. . . . . Dissolves	

WARNING:
This table is a general guide based on our testing. Although every effort was made to ensure its accuracy, we cannot guarantee your results due to variables in temperature and application. Therefore, no warranty is expressed or implied, and the user assumes all risk and liability.

Straight Tubing

Straight Hose

Spiral Hose

Pneumatic Quick Disconnects

TechniFit™ Push-to-Connect Fittings

Fluidfit Push-to-Connect Fittings

Tubing and Hose Cutters

Clamps and Tools

Hose Reels

Brass Fittings

ATP ADVANCED TECHNOLOGY PRODUCTS

www.atp4pneumatics.com